US008336849B2

(12) **United States Patent**
Farner

(10) **Patent No.: US 8,336,849 B2**
(45) **Date of Patent: Dec. 25, 2012**

(54) **CONICAL SEAT SHUT OFF VALVE**

(75) Inventor: **Bruce R. Farner**, Slidell, LA (US)

(73) Assignee: **The United States of America as Represented by the Administrator of the National Aeronautics and Space Administration**, Washington, DC (US)

(*) Notice: Subject to any disclaimer, the term of this patent is extended or adjusted under 35 U.S.C. 154(b) by 336 days.

(21) Appl. No.: **12/704,193**

(22) Filed: **Feb. 11, 2010**

(65) **Prior Publication Data**

US 2011/0193001 A1 Aug. 11, 2011

(51) **Int. Cl.**
F16K 31/12 (2006.01)

(52) **U.S. Cl.** **251/31**; 251/30.01; 251/282; 251/325

(58) **Field of Classification Search** 251/30, 251/30.02, 30.01, 282, 312, 30.05, 31, 325; 137/487.5

See application file for complete search history.

(56) **References Cited**

U.S. PATENT DOCUMENTS

845,063 A * 2/1907 Desper 137/219
1,829,703 A * 10/1931 Larner 137/219
2,592,474 A * 4/1952 Schnyder 137/219
2,601,989 A * 7/1952 Modes 137/625.4
2,919,714 A * 1/1960 Mrazek 137/220
3,533,434 A * 10/1970 Smith 137/220
3,669,143 A * 6/1972 Reese 137/512.3
3,825,026 A * 7/1974 Salerno et al. 137/219
5,904,177 A * 5/1999 Mullin et al. 137/503
5,979,862 A * 11/1999 Wolfges 251/30.01
6,062,530 A 5/2000 Hajjar
6,227,247 B1 * 5/2001 Abel 137/625.62
6,830,229 B2 12/2004 Wetzel et al.
6,955,331 B2 10/2005 Larsen et al.

OTHER PUBLICATIONS

Three pages of product drawing sheets from the company Precision Fluid Controls showing several different views of a flow control valve.

* cited by examiner

Primary Examiner — Eric Keasel
Assistant Examiner — Angelisa Hicks
(74) *Attorney, Agent, or Firm* — Randall Heald; Michelle Ford; Brian Andress

(57) **ABSTRACT**

A valve includes a housing defining a bore having an inlet and extending along a longitudinal axis. A head is attached to the housing and defines a head passage having an outlet. A piston is disposed within the bore and includes a piston passage extending through the piston along the longitudinal axis. The piston is moveable between a closed position in which a sealing end of the piston abuts a seat of the head to close fluid communication through the piston passage and an open position in which the sealing end of the piston is axially spaced along the longitudinal axis from the seat of the head to permit fluid communication through the piston passage between the inlet and the outlet. The housing defines an equalizing chamber in fluid communication with the head passage for damping movement of the piston.

26 Claims, 4 Drawing Sheets

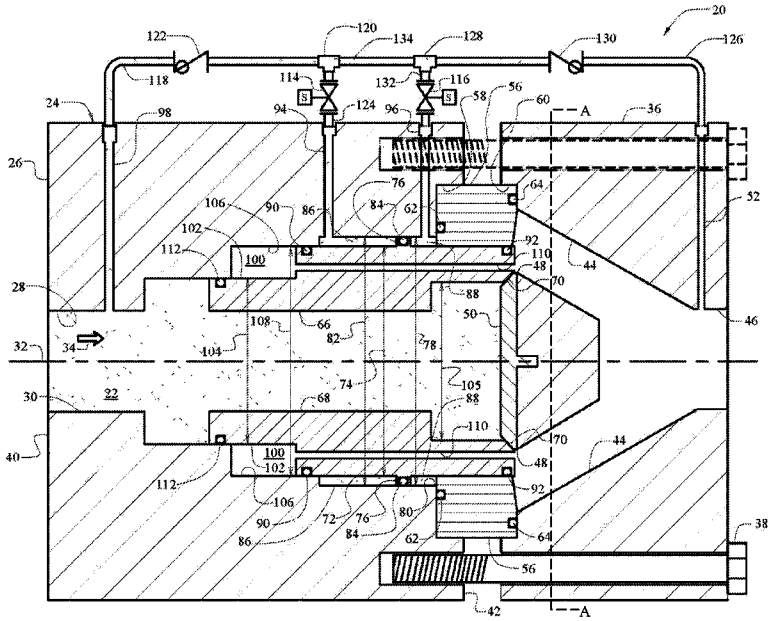

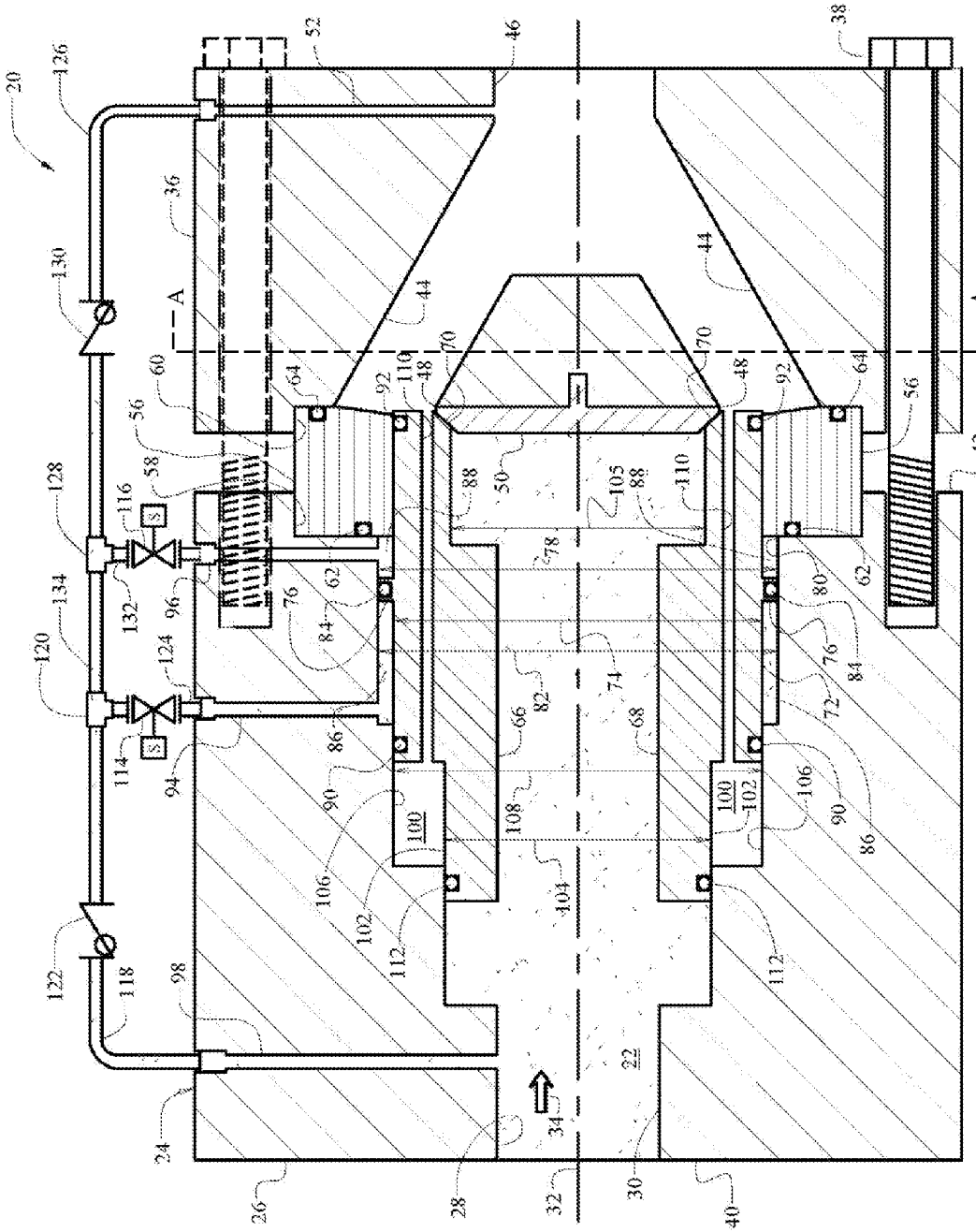

FIG. 1

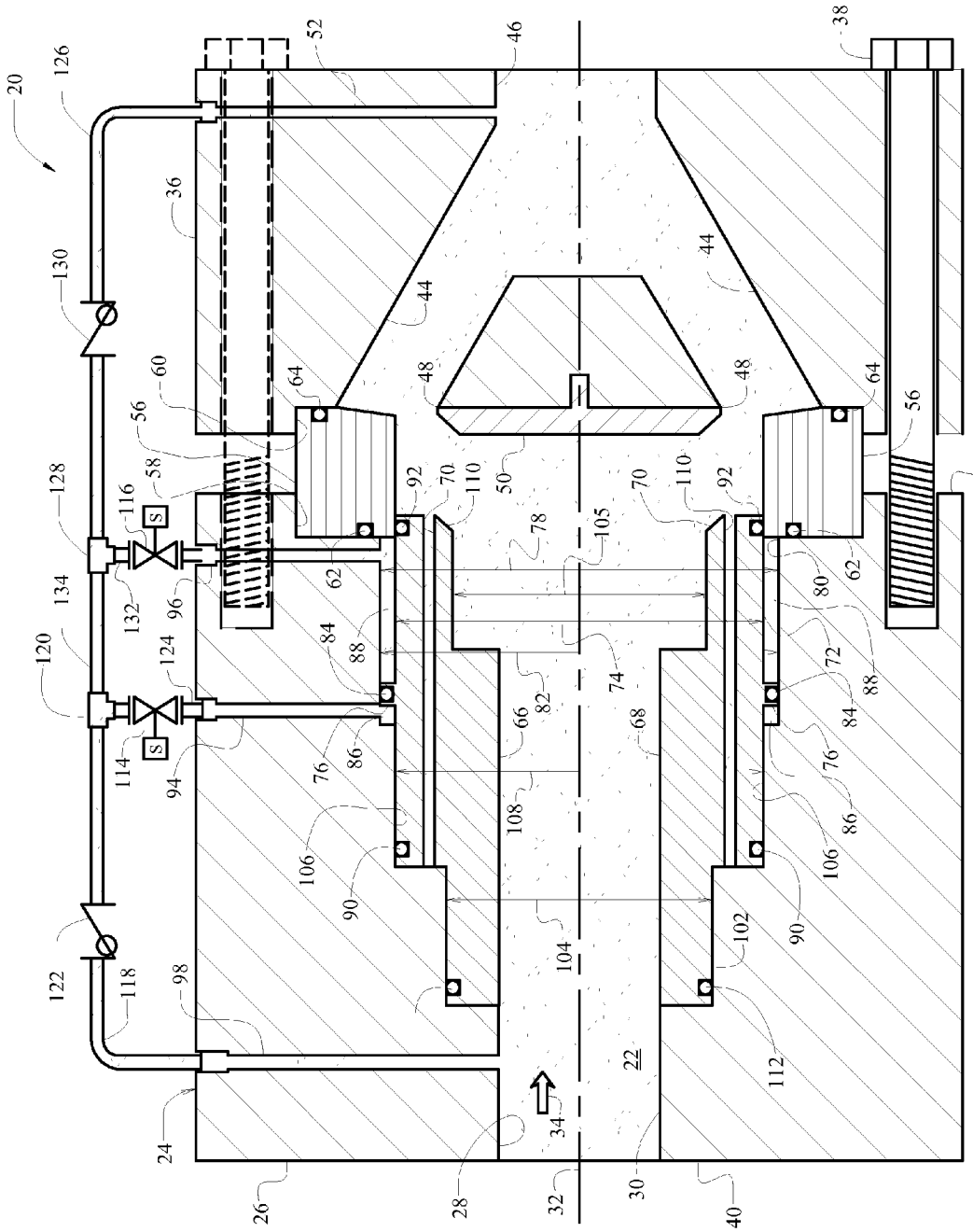
20
126
52
46
38
36
130
44
44
60
64
48
48
64
56
56
42
128
58
116
92
70
110
50
70
110
92
78
105
62
62
80
134
132
96
84
88
74
72
88
120
124
82
66
68
84
114
94
76
86
76
86
108
106
106
90
90
104
102
122
118
98
22
112
24
34
26
28
32
30
40

FIG. 2

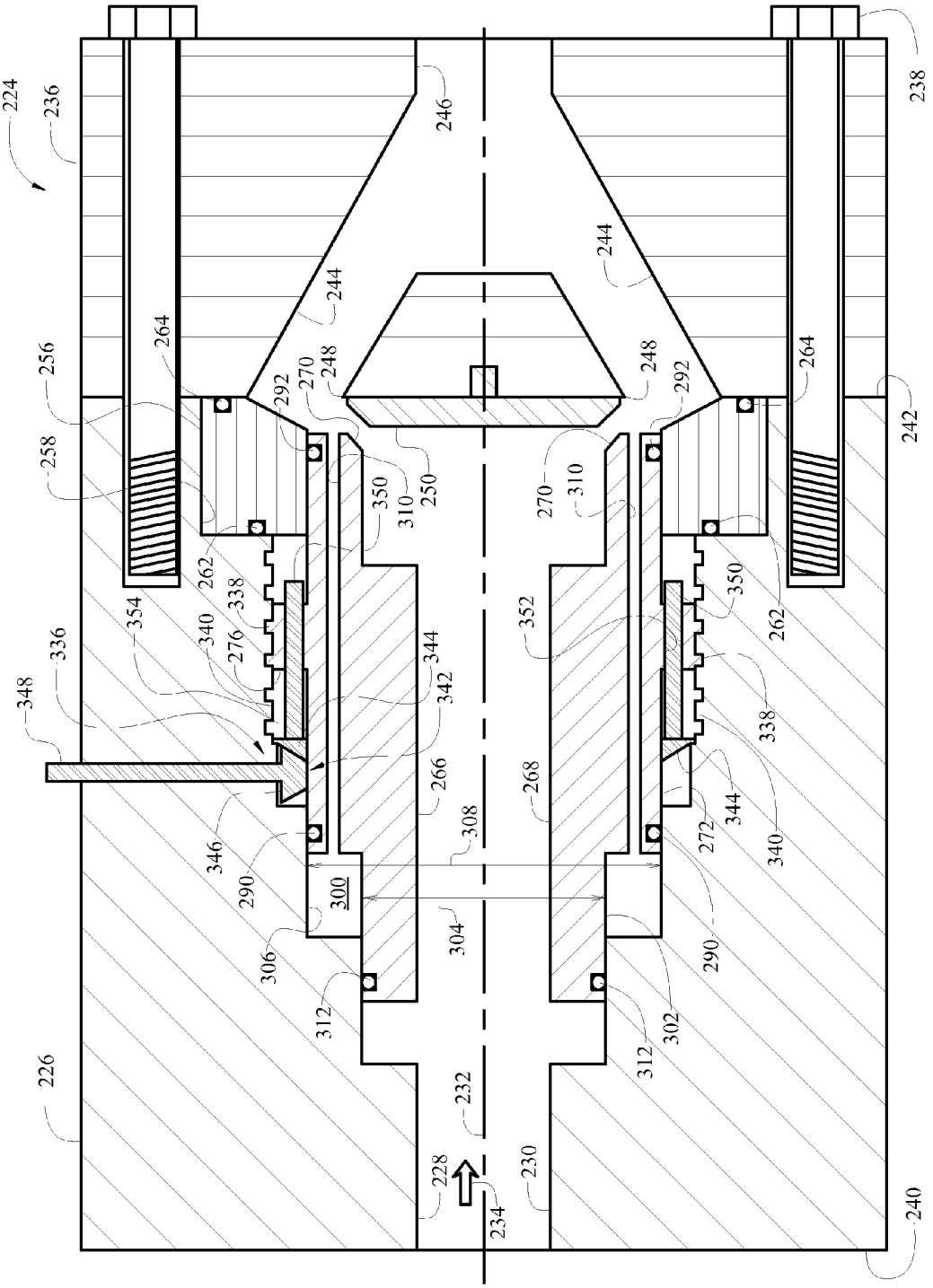
224
236
238
246
244
244
256
264
264
248
248
292
292
270
270
258
242
250
310
310
350
350
262
262
338
338
354
340
276
352
336
344
342
348
266
268
346
308
272
344
340
290
300
304
290
306
312
302
312
226
232
228
230
234
240

FIG. 3

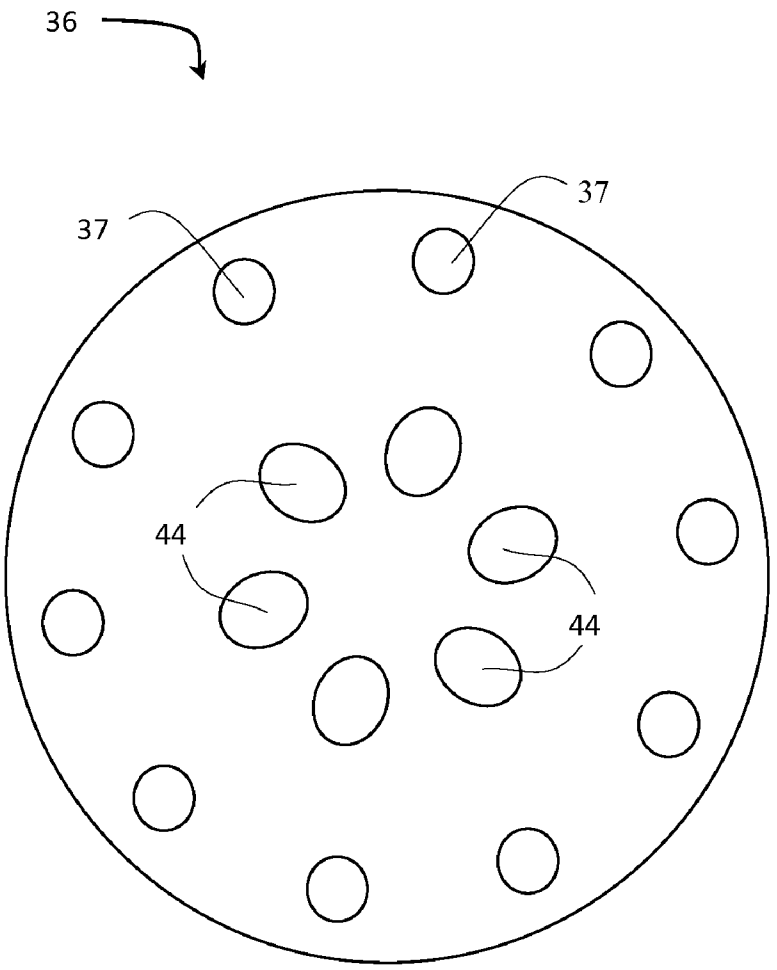

FIG. 4

CONICAL SEAT SHUT OFF VALVE

ORIGIN OF THE INVENTION

The invention described herein was made by an employee of the United States Government and may be manufactured and used by or for the Government of the United States of America for governmental purposes without the payment of any royalties thereon or therefor.

TECHNICAL FIELD

The subject invention generally relates to a fluid valve, and more specifically to an axially moving shut off valve for a high pressure working fluid.

BACKGROUND OF THE INVENTION

Fluid valves are utilized to control a flow of a working fluid through a system of pipes. The valves are utilized to open and close fluid communication between two points within the system. There are many types of valves that exist, such as a ball valve, a gate valve, a butterfly valve, a globe valve, etc.

The various types of valves typically include a housing and a seat. In high pressure applications, the housing and seat are often manufactured from a metal material. Accordingly, movement of the seat to open and close the valve moves the metal seat against the metal housing. The large forces acting on the valves generate a high-friction load on the seat during movement of the seat. The high friction between the seat and the housing, in combination with the metal on metal interface between the seat and the housing, may potentially damage the seat.

Additionally, the valves typically require an actuator, such as a handle, rotary knob, motor, etc., to operate the valve. For high-pressure working fluids, the actuators become large, greatly increasing the overall size and cost of the valve.

SUMMARY OF THE INVENTION

The present invention provides a valve for controlling a flow of a pressurized working fluid. The valve includes a housing defining a bore. The bore includes an inlet, and extends along a longitudinal axis. The valve further includes a head attached to the housing. The head defines a head passage having an outlet. A piston is disposed within the bore. The piston defines a piston passage through the piston along the longitudinal axis. The piston passage communicates the pressurized working fluid therethrough. The piston is moveable between an open position and a closed position. When in the open position, the piston allows fluid communication between the inlet and the outlet. When in the closed position, the piston prevents fluid communication between the inlet and the outlet. The housing defines an equalizing chamber in fluid communication with the head passage. The equalizing chamber is configured for communicating a fluid pressure between the head passage and the equalizing chamber. The fluid pressure in the equalizing chamber dampens movement of the piston between the closed position and the open position.

In another aspect of the present invention, a valve system for controlling a flow of a pressurized working fluid is provided. The valve system includes a valve. The valve includes a housing defining a bore. The bore includes an inlet, and extends along a longitudinal axis. The valve further includes a head attached to the housing. The head defines a head passage having an outlet. A piston is disposed within the bore.

The piston defines a piston passage through the piston along the longitudinal axis. The piston passage communicates the pressurized working fluid therethrough. The piston is moveable between an open position and a closed position. The open position allows fluid communication between the inlet and the outlet. The closed position prevents fluid communication between the inlet and the outlet. The housing and the piston cooperate together to define a first pressure chamber and a second pressure chamber. The first pressure chamber is configured for receiving the pressurized working fluid from one of the bore and the head passage to urge the piston into the closed position. The second pressure chamber is configured for receiving the pressurized working fluid from one of the bore and the head passage to urge the piston into the open position. The housing defines an equalizing chamber in fluid communication with the head passage. The equalizing chamber is configured for communicating a fluid pressure between the head passage and the equalizing chamber. The fluid pressure in the equalizing chamber dampens movement of the piston between the closed position and the open position. The valve system further includes a first control device and a second control device. The first control device is configured for selectively controlling fluid flow between the first pressure chamber and one of the inlet and the outlet. The second control device is configured for selectively controlling fluid flow between the second pressure chamber and one of the inlet and the outlet.

In another aspect of the present invention, a valve for controlling a flow of a pressurized working fluid is provided. The valve includes a housing defining a bore. The bore includes an inlet, and extends along a longitudinal axis. The valve further includes a head attached to the housing. The head defines a head passage having an outlet. A piston is disposed within the bore and defines a piston passage through the piston along the longitudinal axis. The piston passage communicates the pressurized working fluid therethrough. The piston is moveable between an open position and a closed position. The open position allows fluid communication between the inlet and the outlet. The closed position prevents fluid communication between the inlet and the outlet. The valve further includes a drive mechanism coupled to the piston. The drive mechanism is configured for moving the piston along the longitudinal axis between the open position and the closed position. The drive mechanism further secures the piston in an intermediate position between the open position and the closed position. The housing defines an equalizing chamber in fluid communication with the head passage. The equalizing chamber is configured for communicating a fluid pressure between the head passage and the equalizing chamber. The fluid pressure in the equalizing chamber dampens movement of the piston between the closed position and the open position.

Accordingly, the present invention provides an axially moving piston to open and close the valve. The axially moving piston operates as a valve seat and is moved axially into sealing engagement with the head. Accordingly, because the working fluid flows axially through the piston, the pressure of the working fluid does not increase the frictional force acting on the piston as the piston is moved between the open position and the closed position. Additionally, the sealing surface, i.e., valve seat, of the piston does not slide on or across the housing as the piston is moved between the open position and the closed position, thereby preventing potential damage to the sealing surface of the piston. The equalizing chamber applies a fluid pressure force to the piston to minimize a pressure differential, acting on the piston, between the inlet and the outlet of the valve. Accordingly, because of the fluid pressure

within the equalizing chamber, only a minimal force is required to move the piston between the open position and the closed position.

The above features and advantages and other features and advantages of the present invention are readily apparent from the following detailed description of the best modes for carrying out the invention when taken in connection with the accompanying drawings.

BRIEF DESCRIPTION OF THE DRAWINGS

FIG. **1** is a schematic cross sectional view of a valve system showing a valve in a closed position.

FIG. **2** is a schematic cross sectional view of the valve system showing the valve in an open position.

FIG. **3** is a schematic cross sectional view of an alternative embodiment of the valve.

FIG. **4** is a schematic cross-section view A-A taken along the section line A in FIG. **1**.

DESCRIPTION OF THE PREFERRED EMBODIMENTS

Referring to FIGS. **1**, **2**, and **4**, wherein like numerals indicate like parts throughout the several views, a valve system **20** is shown generally at 20. The valve system **20** controls a flow of a pressurized working fluid **22** through a system **20** of pipes. The working fluid **22** may include any fluid transmitted through pipes. Accordingly, the working fluid **22** is not limited to any specific fluid. The valve system **20** may be configured and/or sized to accommodate the working fluid **22** within a wide range of pressures. Accordingly, the valve system **20** is not limited to operation within any specific pressure range.

The valve system **20** includes a shut off valve **24**. The valve **24** controls a flow of the working fluid **22** between two points within the system **20** of pipes. The valve **24** includes a housing **26**. The housing **26** defines a bore **28**, which includes an inlet **30** and extends along a longitudinal axis **32** through the housing **26**. The working fluid **22** enters the valve **24** through the inlet **30** and flows along the longitudinal axis **32** in a direction indicated by arrow **34**.

The valve **24** further includes a head **36**. The head **36** is attached to the housing **26**. A plurality of fasteners **38** extend through fastener openings **37** in the head **36** into threaded engagement with the housing **26** to attach the head **36** to the housing **26**. However, it should be appreciated that the head **36** may be attached to the housing **26** in some other manner not shown or described herein that is capable of securely attaching the head **36** to the housing **26** and withstanding the operating pressures of the working fluid **22**. The housing **26** includes a first end **40** at which the inlet **30** is disposed, and extends along the longitudinal axis **32** to a second end **42**. The head **36** is attached to the housing **26** at the second end **42**, opposite the inlet **30** of the housing **26**.

The head **36** defines a head passage **44** having an outlet **46**. Accordingly, the working fluid **22** flows from the inlet **30** through the head passage **44** and exits the valve **24** through the outlet **46** of the head **36**. The head **36** defines a plurality of openings **48** positioned for receiving the flow of the working fluid **22** from the housing **26**. The plurality of openings **48** are positioned radially about the longitudinal axis **32**, and are spaced equidistant from each other around the longitudinal axis **32**. The head passage **44** includes a plurality of head passages **44**. As best shown in FIG.**4**, a cross-section view A-A taken along section line A in FIG.**1**, each of the plurality of head passages **44** extends from one of the plurality of openings **48**. Each of the plurality of head passages **44** extends inward toward the longitudinal axis **32**, and also extends along the longitudinal axis **32** toward and converging at the outlet **46**. As such, it should be appreciated that the plurality of head passages **44** are angled toward the longitudinal axis **32**, and cooperate to define a generally conical shaped portion therebetween. Additionally, it should also be appreciated that the head passage **44** may include some other shape and/or configuration of passages, and be oriented in some other manner not shown or described herein.

The head **36** includes a seat **50** disposed radially inward about the longitudinal axis **32** relative to the plurality of openings **48**. As such, the seat **50** is disposed between the plurality of openings **48**, within an inner circumference defined by the plurality of openings **48** concentric with the longitudinal axis **32**. Preferably, the seat **50** includes and is manufactured from copper. However, it should be appreciated that the seat **50** may include and be manufactured from some other material not shown or described herein. The seat **50** may be integrally formed with the head **36**. Alternatively, the seat **50** may be attached to the head **36** in any suitable manner.

The head **36** defines an outlet passage **52** extending between the outlet **46** of the head passage **44** and an outer head **36** surface. As shown, the outlet passage **52** extends radially outward from the longitudinal axis **32**. However, it should be appreciated that the outlet passage **52** may include some other shape and be oriented in some other manner not shown or described herein.

The valve **24** further includes a bushing **56**. The bushing **56** is disposed between the housing **26** and the head **36**. The housing **26** defines a housing recess **58** concentric with the longitudinal axis **32** and disposed on the second end **42** of the housing **26**. The bushing **56** is seated within the housing recess **58**. Alternatively, the bushing **56** may be coupled to the housing **26** via a threaded connection or some other connection suitable for aligning the bushing **56** with the longitudinal axis **32** and securing the bushing **56** in place relative to the housing **26**. The head **36** defines a head recess **60** concentric with the longitudinal axis **32** and disposed opposite the housing recess **58**. The bushing **56** is seated within the head recess **60**. Alternatively, the bushing **56** may be coupled to the head **36** via a threaded connection or some other connection suitable for aligning the bushing **56** with the longitudinal axis **32** and securing the bushing **56** in place relative to the housing **26**.

The valve **24** further includes a first bushing seal **62** and a second bushing seal **64**. The first bushing seal **62** is configured for sealing between the bushing **56** and the bore **28**. The second bushing seal **64** is configured for sealing between the bushing **56** and the head passage **44**. The first bushing seal **62** and the second bushing seal **64** may include any type and/or configuration of seal suitable for the type of working fluid **22** utilized and for the operating pressure of the working fluid **22**.

The valve **24** further includes a piston **66** disposed within the bore **28**. The piston **66** defines a piston passage **68** extending completely through the piston **66** along the longitudinal axis **32**. The piston passage **68** communicates the pressurized working fluid **22** therethrough. The piston **66** includes a sealing end **70**, and is moveable between an open position, shown in F*igure* **2**, and a closed position, shown in F*igure* **1**. When in the open position, the sealing end **70** of the piston **66** is spaced from the seat **50** of the head **36** along the longitudinal axis **32** to allow fluid communication between the inlet **30** and the outlet **46**. When in the closed position, the sealing end **70** of the piston **66** abuts the seat **50** of the head **36** in sealing engagement to prevent fluid communication between the inlet **30** and the outlet **46**. Accordingly, when the piston **66** is in the

open position, the working fluid **22** enters the valve **24** through the inlet **30**, flows through the piston passage **68**, enters the head **36** through the plurality of openings **48** and flows through the plurality of openings **48** into the outlet **46**. When the piston **66** is in the closed position, the sealing end **70** of the piston **66** engages the seat **50** and blocks fluid communication between the piston passage **68** and the plurality of openings **48** in the head **36**, thereby closing fluid communication between the inlet **30** and the outlet **46**.

The bushing **56** radially supports the piston **66** about the longitudinal axis **32** and guides the piston **66** during movement along the longitudinal axis **32** between the open position and the closed position. Accordingly, the bushing **56** maintains a proper alignment of the piston **66** along the longitudinal axis **32**.

The piston **66** includes a first portion **72** defining a first diameter **74**, and an annular collar portion **76** defining a second diameter **78**. The second diameter **78** of the annular collar portion **76** is greater than the first diameter **74** of the first portion **72** of the piston **66**. The annular collar portion **76** extends radially outward from the longitudinal axis **32**, and is disposed at an approximate midsection of the first portion **72**. Accordingly, the annular collar portion **76** bisects the first portion **72** of the piston **66** into substantially equal halves. The bore **28** includes a first section **80** defining a bore diameter **82**.

The valve **24** further includes a collar seal **84**. The collar seal **84** is disposed on a radially outer surface of the annular collar portion **76**. The collar seal **84** is configured for sealing against the first section **80** of the bore **28**, i.e., the collar seal **84** seals between the first section **80** of the bore **28** and the annular collar portion **76** of the piston **66**. The bore diameter **82** is substantially equal to the second diameter **78** of the annular collar portion **76**, with the difference between the bore diameter **82** and the second diameter **78** being only large enough to allow proper functioning of the collar seal **84**. Accordingly, it should be appreciated that the difference between the bore diameter **82** and the second diameter **78** will vary with the specific type and or configuration of the collar seal **84**. The collar seal **84** may include any type and/or configuration of seal suitable for the type of working fluid **22** utilized and for the operating pressure of the working fluid **22**.

The housing **26** and the piston **66** cooperate together to define a first pressure chamber **86** and a second pressure chamber **88**. The first pressure chamber **86** is configured for receiving the pressurized working fluid **22** from one of the bore **28** and the head passage **44** to urge the piston **66** into the closed position. The second pressure chamber **88** is configured for receiving the pressurized working fluid **22** from one of the bore **28** and the head passage **44** to urge the piston **66** into the open position.

The first pressure chamber **86** and the second pressure chamber **88** are disposed on radially opposing surfaces or sides of the annular collar portion **76**. Accordingly, the first pressure chamber **86** is disposed on a first side of the annular collar portion **76** and the second pressure chamber **88** is disposed on a second side of the annular collar portion **76**.

In operation, to move the piston **66** into the closed position, the working fluid **22** is directed into the first pressure chamber **86**. The second pressure chamber **88** is vented to ensure no pressure exists within the second pressure chamber **88** that would resist the pressure exerted by the working fluid **22** in the first pressure chamber **86**. The pressure from the working fluid **22** in the first pressure chamber **86** exerts a force on the annular collar portion **76** axially along the longitudinal axis **32** to move the piston **66** axially along the longitudinal axis **32** into the closed position, with the sealing end **70** of the piston **66** abutting the seat **50** of the head **36**. Accordingly, the sealing end **70** of the piston **66** moves axially into engagement with the seat **50**, and does not slide or otherwise rotate against the seat **50**. To move the piston **66** into the open position, the working fluid **22** is directed into the second pressure chamber **88**. The first pressure chamber **86** is vented to ensure no pressure exists within the first pressure chamber **86** that would resist the pressure exerted by the working fluid **22** in the second pressure chamber **88**. The pressure from the working fluid **22** in the second pressure chamber **88** exerts a force on the annular collar portion **76** axially along the longitudinal axis **32** to move the piston **66** axially along the longitudinal axis **32** into the open position, with the sealing end **70** of the piston **66** spaced from the seat **50** of the head **36**. As shown and described herein, the movement of the piston **66** is controlled by the working fluid **22** flowing through the valve **24**. However, it should be appreciated that an independent fluid, such as air, nitrogen, or water, from an exterior source, may alternatively be utilized to control the movement of the piston **66**.

The valve **24** further includes a first piston seal **90** and a second piston seal **92**. The first piston seal **90** is configured for sealing the first pressure chamber **86** from the bore **28**. The second piston seal **92** is configured for sealing the second pressure chamber **88** from the bore **28**. More specifically, the second piston seal **92** is disposed between the piston **66** and the bushing **56**. The collar seal **84** is disposed axially along the longitudinal axis **32** between the first piston seal **90** and the second piston seal **92**. The first piston seal **90** and the second piston seal **92** may include any type and/or configuration of seal suitable for the type of working fluid **22** utilized and for the operating pressure of the working fluid **22**.

The housing **26** defines a first pressure chamber passage **94** and a second pressure chamber passage **96**. The first pressure chamber passage **94** extends between the first pressure chamber **86** and an outer surface of the housing **26**. The second pressure chamber passage **96** extends between the second pressure chamber **88** and the outer surface of the housing **26**. The housing **26** further defines an inlet passage **98**, which extends between the inlet **30** of the bore **28** and the outer surface of the housing **26**.

As shown, the first pressure chamber passage **94**, the second pressure chamber passage **96** and the inlet passage **98** each extend radially outward from the longitudinal axis **32**. However, it should be appreciated that the first pressure chamber passage **94**, the second pressure chamber passage **96** and the inlet passage **98** may include some other shape and be oriented in some other manner not shown or described herein.

The housing **26** defines an equalizing chamber **100**. The equalizing chamber **100** is in fluid communication with the head passage **44** of the head **36**. The equalizing chamber **100** is configured for communicating a fluid pressure between the head passage **44** and the equalizing chamber **100** to dampen movement of the piston **66** between the closed position and the open position. The equalizing chamber **100** is disposed within the housing **26** in a position suitable to exert an axial force along the longitudinal axis **32** on the first portion **72** of the piston **66**. The pressure within the equalizing chamber **100** counteracts the pressure exerted from the working fluid **22** downstream of the seat **50** in the head passage **44**. Accordingly, the pressure within the equalizing chamber **100** counteracts and dampens the movement of the piston **66** from the closed position into the open position, and balances the forces on the piston **66** to be independent of the pressures at the inlet **30** and the outlet **46** thereby minimizing rapid and abrupt movement of the piston **66** into the open position.

As shown, the bore **28** and the piston **66** cooperate together to define the equalizing chamber **100**. The piston **66** includes

a second portion **102** having a diameter **104** less than the first diameter **74** of the first portion **72**, and equal to a enlarged inside diameter **105** of the piston **66**. The bore **28** includes a second section **106** having a diameter **108** less than the bore diameter **82** of the first section **80**. The difference between the diameter of the second portion **102** of the piston **66** and the bore diameter **82** of the section of the bore **28** defines the equalizing chamber **100**.

The piston **66** defines at least one port **110** extending longitudinally through the first portion **72** of the piston **66** between the equalizing chamber **100** and the head passage **44**. The at least one port **110** provides fluid communication between the head passage **44** and the equalizing chamber **100** regardless of the position of the piston **66**. As such, the at least one port **110** provides fluid communication between the head passage **44** and the equalizing chamber **100** when the piston **66** is in either of the open position and the closed position. It should be appreciated that the port **110** may be configured in some other manner capable of providing an equalization fluid pressure to the equalizing chamber **100**.

The equalizing chamber **100** is sealed from the first pressure chamber **86**, the second pressure chamber **88** and the inlet **30** of the bore **28**. The first piston seal **90** seals the inlet **30** chamber from the first pressure chamber **86** and the second pressure chamber **88**. A third piston seal **112** seals the equalizing chamber **100** from the inlet **30**, and prevents the working fluid **22** from entering the equalizing chamber **100** from the inlet **30**.

The valve system **20** includes a first control device **114** and a second control device **116**. The first control device **114** is configured for selectively controlling fluid flow between the first pressure chamber **86** and one of the inlet **30** and the outlet **46**. The second control device **116** is configured for selectively controlling fluid flow between the second pressure chamber **88** and one of the inlet **30** and the outlet **46**.

As shown, a first control line **118** connects the inlet passage **98** with a first tee fitting **120**. A first check valve **122** is disposed within the first control line **118** to prevent fluid flow into the inlet **30** of the bore **28**. A second control line **124** connects the first pressure chamber passage **94** with the first tee fitting **120**. The first control device **114** is disposed in-line with the second control line **124**. A third control line **126** connects the outlet passage **52** with a second tee fitting **128**. A second check valve **130** is disposed within the third control line **126** to prevent fluid flow into the outlet **46** of the head passage **44**. A fourth control line **132** connects the second pressure chamber passage **96** with the second tee fitting **128**. The second control device **116** is disposed in-line with the fourth control line **132**. A fifth control line **134** connects the first tee fitting **120** and the second tee fitting **128**.

The first control device **114** and the second control device **116** may each include a solenoid operated valve. However, it should be appreciated that the first control device **114** and the second control device **116** may include some other type of valve and be controlled by some other mechanism other than a solenoid. The first control device **114** and the second control device **116** operate to open and/or close fluid communication between the various control lines to provide the working fluid **22** to the first pressure chamber **86** or the second pressure chamber **88**, or vent the first pressure chamber **86** or the second pressure chamber **88**, as required to move the piston **66** between the open position and the closed position as described above. It should also be appreciate that the first control device **114** and the second control device **116**, and the various control lines interconnecting the first control device **114** and the second control device **116** with the inlet passage **98**, the first pressure chamber passage **94**, the second pressure chamber passage **96**, and the outlet passage **52** may be configured and oriented in some other manner other than shown and described herein.

Referring to FIG. **3**, an alternative embodiment of the valve is shown generally at **224**. The alternative embodiment of the valve **24** is configured to provide throttleable, i.e., variable, control over the flow rate of the working fluid **22** flowing through the valve **224**. Throughout the description of the alternative embodiment of the valve **224**, elements of the alternative embodiment of the valve **224** similar to the elements of the first embodiment of the valve **24** described above are identified with the same reference numeral increased by two hundred. For example, the inlet **30**, which is identified by the reference numeral **30** in the first embodiment of the valve **24**, is identified by the reference numeral **230** in the description of the alternative embodiment of the valve **224**.

The alternative embodiment of the valve **224** includes a drive mechanism **336** coupled to the piston **266**. The drive mechanism **336** is configured for moving the piston **266** along the longitudinal axis **232** between the open position and the closed position. Additionally, the drive mechanism **336** is capable of securing the piston **266** in an intermediate position between the open position and the closed position. It should be appreciated that the intermediate position may include any of an infinite number of positions disposed along the longitudinal axis **232** between the fully open position and the fully closed position. It should also be appreciated that the drive mechanism **336** may be configured in some other manner not shown or described herein capable of providing variable control over the flow rate of the working fluid **22**.

Within the alternative embodiment of the valve **224**, the piston **266** includes piston threads **338** and the bore **228** includes bore threads **340**. The piston threads **338** are in threaded engagement with the bore threads **340** for threaded movement along the longitudinal axis **232**. As such, rotation of the piston **266** about the longitudinal axis **232** moves the piston **266** along the longitudinal axis **232** via the threaded engagement between the piston threads **338** and the bore threads **340**.

The drive mechanism **336** includes a bevel gear set **342** coupled to the piston **266**. The bevel gear set **342** is configured for rotating the piston **266** about the longitudinal axis **232** to thread the piston **266** along the bore threads **340** and thereby move the piston **266** along the longitudinal axis **232**. The bevel gear set **342** includes an annular ring gear **344** disposed concentrically about the longitudinal axis **232** and encircling the first portion **272** of the piston **266**. The bevel gear set **342** further includes a stem gear **346** in meshing engagement with the annular ring gear **344**. The stem gear **346** includes a stem portion **348** extending transversely outward from the longitudinal axis **232** to beyond the outer surface of the housing **226**. As such, the stem gear **346** may be engaged from outside of the housing **226** to actuate the piston **266**. The stem gear **346** may be actuated manually. However, it should be appreciated that the stem gear **346** may alternatively be actuated by a controller or the like, such as a motor. Rotation of the stem gear **346** causes the annular ring gear **344** to rotate about the longitudinal axis **232**.

The drive mechanism **336** further includes at least one rod **350**. Preferably, the at least one rod **350** includes a plurality of rods **350** radially spaced about the longitudinal axis **232** and equidistant from each other. The rods **350** extend from the annular ring gear **344** along the longitudinal axis **232** into sliding engagement with the piston **266**. The rods **350** are configured for rotating the piston **266** about the longitudinal axis **232** in response to rotation of the annular ring gear **344** about the longitudinal axis **232**. It should be appreciated that

as the piston **266** rotates about the longitudinal axis **232** and thereby moves along the longitudinal axis **232**, the piston **266** slides along the rods **350** towards or away from the annular ring gear **344**.

As shown, the annular collar portion **276** of the piston **266** defines an aperture **352** for each of the rods **350**, with each of the rods **350** extending through an aperture **352** of the annular collar portion **276**. The apertures **352** extend along and are parallel with the longitudinal axis **232**. However, it should be appreciated that the rods **350** may be coupled to the piston **266** in some other manner not shown or described herein.

The housing **226** and the piston **266** cooperate together to define a drive chamber **354** within the bore **228** with the drive mechanism **336** at least partially disposed within the drive chamber **354**.

As described above, the housing **226** defines the equalizing chamber **300**, which is in fluid communication with the head passage **244**. The drive chamber **354** is sealed from the inlet **230**, the equalizing chamber **300**, and the head passage **244**. More specifically, the first piston seal **290** and the third piston seal **312** cooperate to seal the drive chamber **354** from the inlet **230** and the equalizing chamber **300**, and the second piston seal **292** seals the drive chamber **354** from the head passage **244**.

Because the working fluid **222** flows axially along the longitudinal axis **232** through the piston passage **268**, and the piston **266** moves axially along the longitudinal axis **232** between the open position, the closed position, and the intermediate position, the fluid pressure of the working fluid **222** does not effect the effort required to move the piston **266**.

While the best modes for carrying out the invention have been described in detail, those familiar with the art to which this invention relates will recognize various alternative designs and embodiments for practicing the invention within the scope of the appended claims.

The invention claimed is:

1. A valve for controlling a flow of a pressurized working fluid, the valve comprising:

a housing defining a bore having an inlet and extending along a longitudinal axis;

a head attached to said housing and defining a head passage having an outlet;

a piston disposed within said bore and defining a piston passage through said piston along said longitudinal axis for communicating the pressurized working fluid therethrough, said piston moveable between an open position allowing fluid communication between said inlet and said outlet, and a closed position preventing fluid communication between said inlet and said outlet;

said housing defining an equalizing chamber in fluid communication with said head passage and configured for communicating a fluid pressure between said head passage and said equalizing chamber to dampen movement of said piston between said closed position and said open position;

wherein said housing and said piston cooperate together to define a first pressure chamber and a second pressure chamber with said first pressure chamber configured for receiving the pressurized working fluid from one of said bore and said head passage to urge said piston into said closed position and said second pressure chamber configured for receiving the pressurized working fluid from one of said bore and said head passage to urge said piston into said open position; and

a first piston seal configured for sealing said first pressure chamber from said bore and a second piston seal configured for sealing said second pressure chamber from said bore;

wherein said piston includes a first portion defining a first diameter and an annular collar portion extending radially outward from said longitudinal axis at an approximate midsection of said first portion to define a second diameter greater than said first diameter.

2. A valve as set forth in claim **1** further comprising a bushing disposed between said housing and said head and radially supporting said piston for guided movement along said longitudinal axis between said open position and said closed position.

3. A valve as set forth in claim **2** wherein said second piston seal is disposed between said piston and said bushing.

4. A valve as set forth in claim **2** further comprising a first bushing seal and a second bushing seal with said first bushing seal configured for sealing between said bushing and said bore and a second bushing seal configured for sealing between said bushing and said head passage.

5. A valve as set forth in claim **1** wherein said bore includes a first section defining a diameter substantially equal to said second diameter of said annular collar portion.

6. A valve as set forth in claim **5** further comprising a collar seal disposed on a radially outer surface of said annular collar portion axially between said first piston seal and said second piston seal along said longitudinal axis, wherein said collar seal is configured for sealing against said first section of said bore, with said first pressure chamber and said second pressure chamber disposed on opposing radially surfaces of said annular collar portion.

7. A valve as set forth in claim **1** wherein said equalizing chamber is sealed from said first pressure chamber, said second pressure chamber and said inlet of said bore.

8. A valve as set forth in claim **7** wherein said bore and said piston cooperate together to define said equalizing chamber.

9. A valve as set forth in claim **8** wherein said piston defines at least one port extending longitudinally through said first portion of said piston between said equalizing chamber and said head passage.

10. A valve as set forth in claim **1** wherein said head defines a plurality of openings and said head passage includes a plurality of head passages with each of said plurality of head passages extending from one of said plurality of openings inward toward said longitudinal axis and along said longitudinal axis to said outlet.

11. A valve as set forth in claim **10** wherein said head includes a seat disposed radially inward about said longitudinal axis relative to said plurality of openings.

12. A valve as set forth in claim **1** wherein said housing defines a first pressure chamber passage and a second pressure chamber passage with said first pressure chamber passage extending between said first pressure chamber and an outer surface of said housing and said second pressure chamber passage extending between said second pressure chamber and the outer surface of said housing.

13. A valve as set forth in claim **12** wherein said housing defines an inlet passage extending between said inlet of said bore and the outer surface of said housing.

14. A valve as set forth in claim **13** wherein said head defines an outlet passage extending between said outlet of said head passage and an outer surface of said head.

15. A valve system for controlling a flow of a pressurized working fluid, the system comprising:

a valve including:

a housing defining a bore having an inlet and extending along a longitudinal axis;

a head attached to said housing opposite said inlet of said housing and defining a head passage having an outlet; and

a piston disposed within said bore and defining a piston passage through said piston along said longitudinal axis for communicating the pressurized working fluid therethrough, said piston moveable between an open position allowing fluid communication between said inlet and said outlet and a closed position preventing fluid communication between said inlet and said outlet;

said housing and said piston cooperating together to define a first pressure chamber and a second pressure chamber with said first pressure chamber configured for receiving the pressurized working fluid from one of said bore and said head passage to urge said piston into said closed position and said second pressure chamber configured for receiving the pressurized working fluid from one of said bore and said head passage to urge said piston into said open position;

said housing defining an equalizing chamber in fluid communication with said head passage and configured for communicating a fluid pressure between said head passage and said equalizing chamber to dampen movement of said piston between said closed position and said open position;

wherein said housing and said piston cooperate together to define a first pressure chamber and a second pressure chamber with said first pressure chamber configured for receiving the pressurized working fluid from one of said bore and said head passage to urge said piston into said closed position and said second pressure chamber configured for receiving the pressurized working fluid from one of said bore and said head passage to urge said piston into said open position; and

a first piston seal configured for sealing said first pressure chamber from said bore and a second piston seal configured for sealing said second pressure chamber from said bore;

wherein said piston includes a first portion defining a first diameter and an annular collar portion extending radially outward from said longitudinal axis at an approximate midsection of said first portion to define a second diameter greater than said first diameter;

a first control device configured for selectively controlling fluid flow between said first pressure chamber and one of said inlet and said outlet; and

a second control device configured for selectively controlling fluid flow between said second pressure chamber and one of said inlet and said outlet.

16. A valve system as set forth in claim **15** wherein each of said first control device and said second control device include a solenoid operated valve.

17. A valve as set forth in claim **15** wherein said equalizing chamber is sealed from said first pressure chamber, said second pressure chamber and said inlet of said bore.

18. A valve as set forth in claim **17** wherein said bore and said piston cooperate together to define said equalizing chamber.

19. A valve as set forth in claim **18** wherein said piston defines at least one port extending longitudinally through said first portion of said piston between said equalizing chamber and said head passage.

20. A valve for controlling a flow of a pressurized working fluid, the valve comprising:

a housing defining a bore having an inlet and extending along a longitudinal axis;

a head attached to said housing and defining a head passage having an outlet;

a piston disposed within said bore and defining a piston passage through said piston along said longitudinal axis for communicating the pressurized working fluid therethrough, said piston moveable between an open position allowing fluid communication between said inlet and said outlet and a closed position preventing fluid communication between said inlet and said outlet; and

a drive mechanism coupled to said piston and configured for moving said piston along said longitudinal axis between said open position and said closed position, and for securing said piston in an intermediate position between said open position and said closed position;

said housing defining an equalizing chamber in fluid communication with said head passage and configured for communicating a fluid pressure between said head passage and said equalizing chamber to dampen movement of said piston between said closed position and said open position;

wherein said housing and said piston cooperate together to define a first pressure chamber and a second pressure chamber with said first pressure chamber configured for receiving the pressurized working fluid from one of said bore and said head passage to urge said piston into said closed position and said second pressure chamber configured for receiving the pressurized working fluid from one of said bore and said head passage to urge said piston into said open position; and

a first piston seal configured for sealing said first pressure chamber from said bore and a second piston seal configured for sealing said second pressure chamber from said bore;

wherein said piston includes a first portion defining a first diameter and an annular collar portion extending radially outward from said longitudinal axis at an approximate midsection of said first portion to define a second diameter greater than said first diameter.

21. A valve as set forth in claim **20** wherein said piston includes piston threads and said bore includes bore threads with said piston threads in threaded engagement with said bore threads for threaded movement along said longitudinal axis.

22. A valve as set forth in claim **21** wherein said drive mechanism includes a bevel gear set coupled to said piston and configured for rotating said piston about said longitudinal axis to thread said piston along said bore threads to move said piston along said longitudinal axis.

23. A valve as set forth in claim **22** wherein said bevel gear set includes an annular ring gear disposed concentrically about said longitudinal axis and a stem gear in meshing engagement with said annular ring gear and including a stem portion extending transversely outward from said longitudinal axis to beyond an outer surface of said housing.

24. A valve as set forth in claim **23** wherein said drive mechanism includes at least one rod extending from said annular ring gear along said longitudinal axis into engagement with said piston and configured for rotating said piston

about said longitudinal axis in response to rotation of said annual ring gear about said longitudinal axis.

25. A valve as set forth in claim **20** wherein said housing and said piston cooperate together to define a drive chamber within said bore with said drive mechanism at least partially disposed within said drive chamber.

26. A valve as set forth in claim **25** wherein said drive chamber is sealed from said inlet, said equalizing chamber, and said head passage.

* * * * *