US008902015B1

(12) **United States Patent**
Srinivasan, V et al.

(10) **Patent No.: US 8,902,015 B1**
(45) **Date of Patent: Dec. 2, 2014**

(54) **RADIO FREQUENCY POWER LOAD AND ASSOCIATED METHOD**

(75) Inventors: **Karthik Srinivasan, V**, Madison, AL (US); **Todd M. Freestone**, Madison, AL (US); **William Herbert Sims, III**, New Market, AL (US)

(73) Assignee: **The United States of America as Represented by the Administrator of the National Aeronautics and Space Administration**, Washington, DC (US)

(*) Notice: Subject to any disclaimer, the term of this patent is extended or adjusted under 35 U.S.C. 154(b) by 440 days.

(21) Appl. No.: **13/299,930**

(22) Filed: **Nov. 18, 2011**

(51) **Int. Cl.**
H04B 1/04 (2006.01)
H01P 1/26 (2006.01)

(52) **U.S. Cl.**
CPC ***H01P 1/262*** (2013.01)
USPC ..... **333/22 F**; 455/120

(58) **Field of Classification Search**
USPC ..... 333/22 F, 22 R, 81 R, 81 B, 208, 209, 333/211, 234, 227; 455/120
See application file for complete search history.

(56) **References Cited**

U.S. PATENT DOCUMENTS

3,678,749	A	7/1972	Harper	
4,724,400	A	2/1988	Luettgenau	
5,119,042	A	6/1992	Crampton et al.	
5,198,153	A	3/1993	Angelopoulos et al.	
5,204,637	A	4/1993	Trinh	
5,256,987	A	10/1993	Kibayashi et al.	
5,561,395	A	10/1996	Melton et al.	
5,793,253	A	8/1998	Kumar et al.	
5,831,479	A	11/1998	Leffel et al.	
5,867,060	A	2/1999	Burkett, Jr. et al.	
6,020,787	A	2/2000	Kim et al.	
6,037,840	A	3/2000	Myer	
6,242,735	B1	6/2001	Li et al.	
6,331,356	B1	12/2001	Angelopoulos et al.	
6,507,243	B2	1/2003	Harris et al.	
6,600,142	B2	7/2003	Ryan et al.	
6,646,504	B2	11/2003	Dittmer et al.	
6,650,200	B2	11/2003	Culliton et al.	
6,707,671	B2	3/2004	Yamashita et al.	
6,887,339	B1	5/2005	Goodman et al.	
6,914,226	B2	7/2005	Ottaway	
6,982,613	B2	1/2006	Wu et al.	
6,985,047	B2 *	1/2006	Brown et al.	333/81 B
7,041,535	B2	5/2006	Yamashita et al.	
7,831,225	B2 *	11/2010	Sims et al.	455/120
2002/0001627	A1	1/2002	Nerreter et al.	
2003/0042977	A1	3/2003	Kanda	
2003/0215373	A1	11/2003	Reyzelman et al.	
2003/0218566	A1	11/2003	Feldle et al.	
2006/0137613	A1	6/2006	Kasai	

* cited by examiner

Primary Examiner — Stephen Jones
(74) *Attorney, Agent, or Firm* — Norton R. Townsley; James J. McGroary

(57) **ABSTRACT**

A radio frequency power load and associated method. A radio frequency power load apparatus may include a container with an ionized fluid therein. The apparatus may include one conductor immersed in a fluid and another conductor electrically connected to the container. A radio frequency transmission system may include a radio frequency transmitter, a radio frequency amplifier connected to the transmitter and a radio frequency power load apparatus connected to the amplifier. The apparatus may include a fluid having an ion source therein, one conductor immersed in a fluid, and another conductor electrically connected to the container. A method of dissipating power generated by a radio frequency transmission system may include constructing a waveguide with ionized fluid in a container and connecting the waveguide to an amplifier of the transmission system.

12 Claims, 5 Drawing Sheets

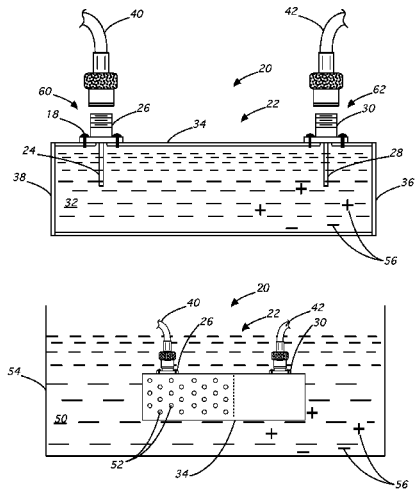

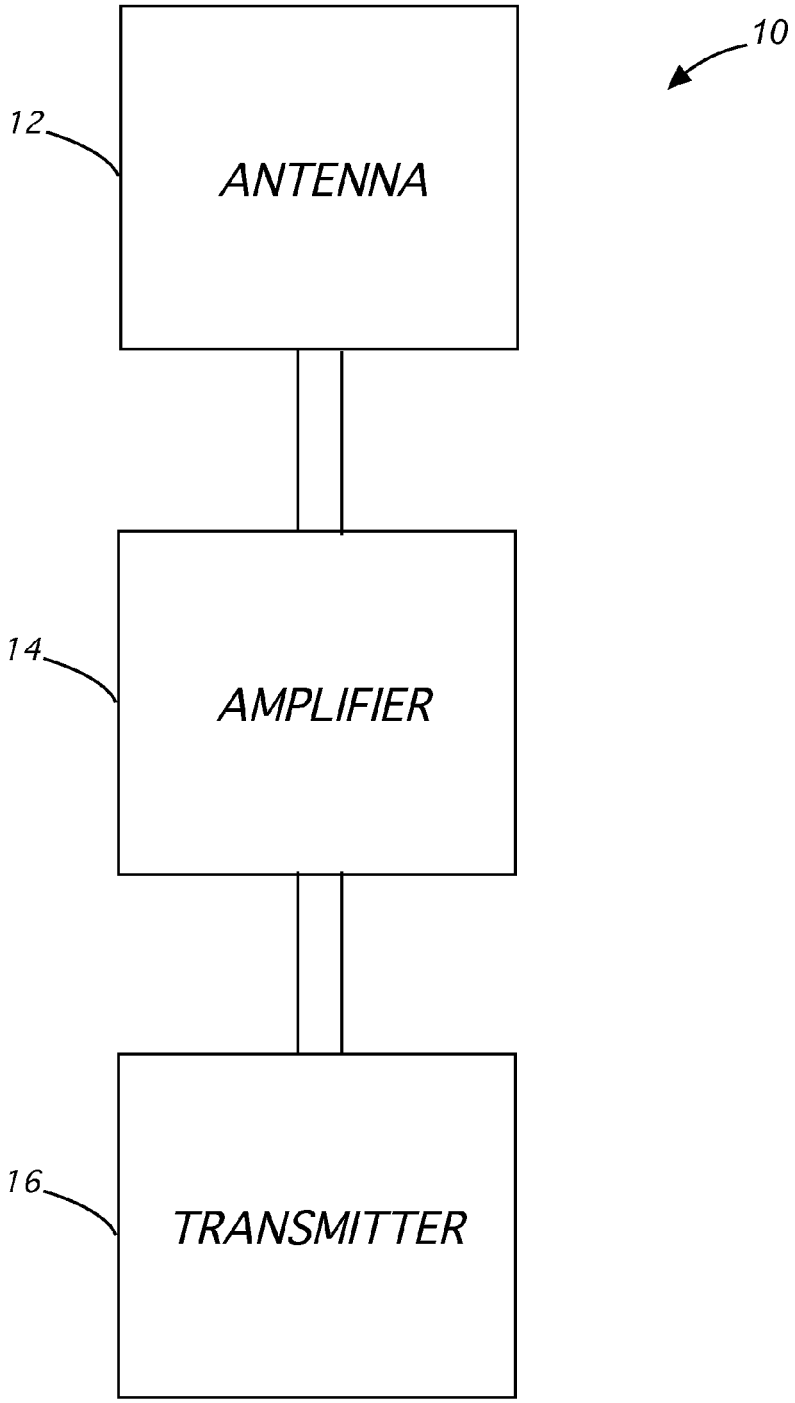

FIG. 1

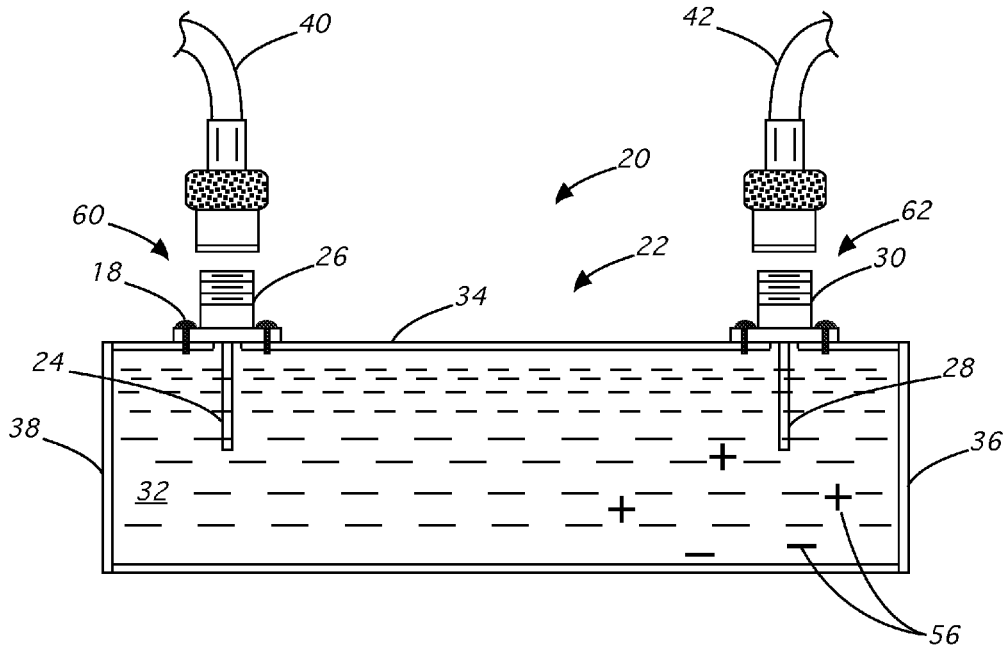
40
42
20
60
62
22
18
26
30
34
24
28
38
36
32
56

FIG. 2

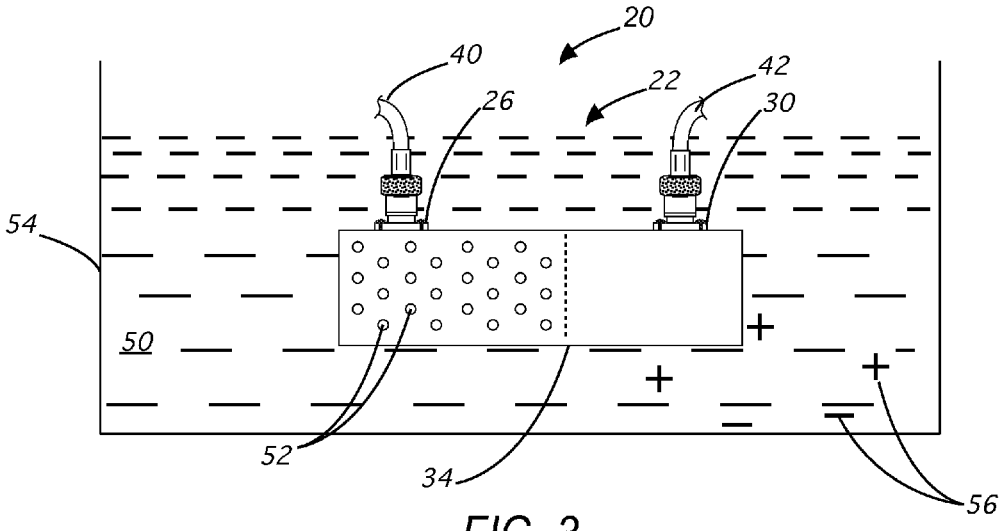
20
40
22
42
26
30
54
50
52
34
56

FIG. 3

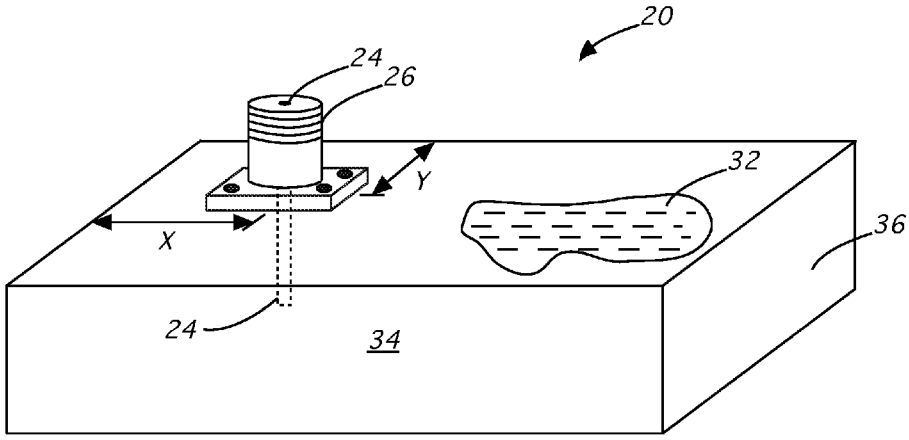
20
24
26
Y
32
X
36
24
34

FIG. 4

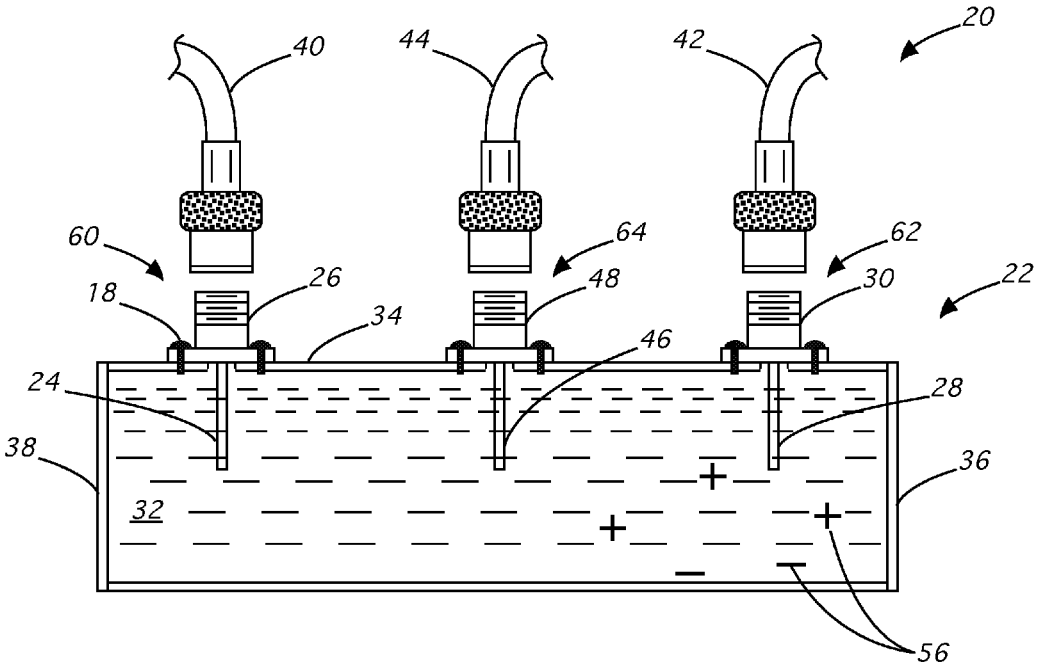
40
44
42
20
60
64
62
18
26
48
30
22
34
46
24
28
38
36
32
56

FIG. 5

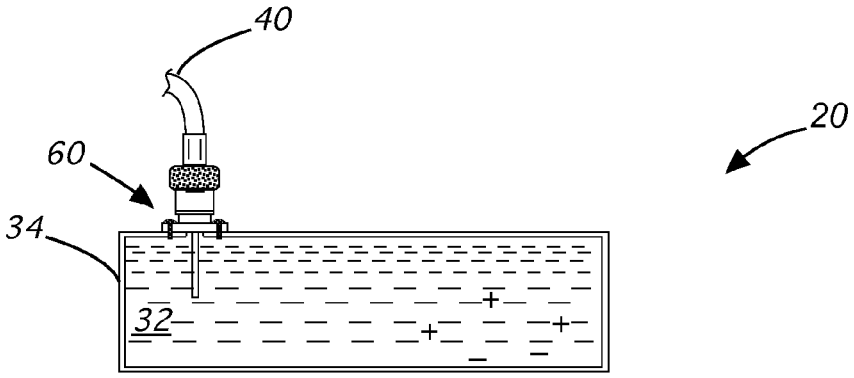

FIG. 6

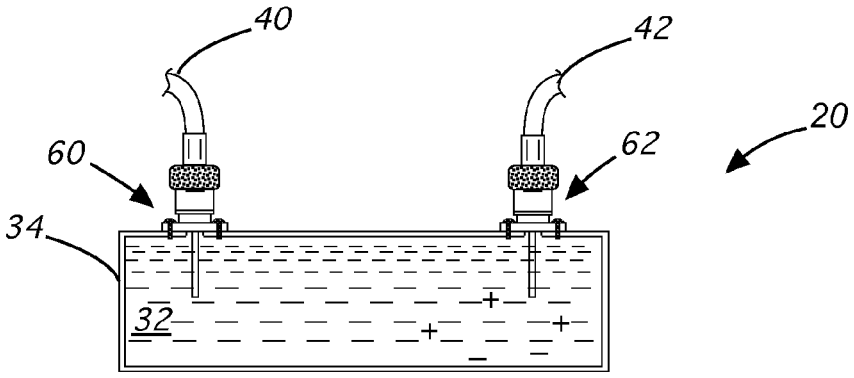

FIG. 7

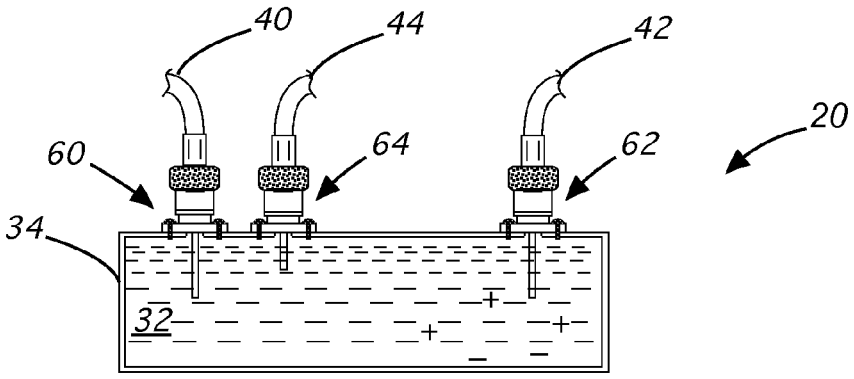

FIG. 8

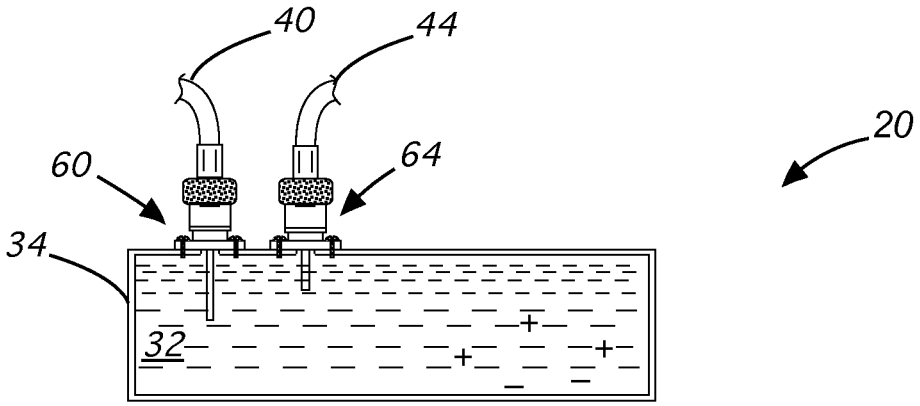

FIG. 9

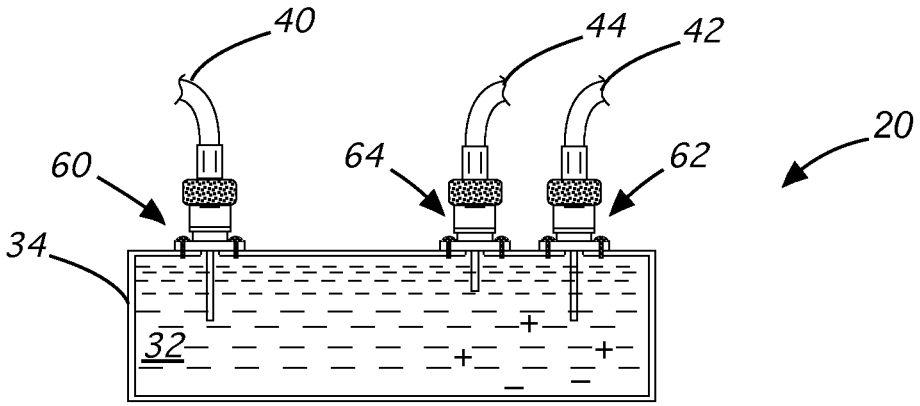

FIG. 10

RADIO FREQUENCY POWER LOAD AND ASSOCIATED METHOD

ORIGIN OF THE INVENTION

This invention was made in part by employees of the United States Government and may be manufactured and used by or for the Government of the United States of America for Governmental purposes without the payment of royalties thereon or therefor.

BACKGROUND

The present disclosure relates generally to radio frequency (RF) transmission systems and, in an embodiment described herein, more particularly provides an RF power load and associated method.

Typical conventional radio frequency (RF) power loads are large and cumbersome for a given power level handling capability. Generally, RF power loads are made up of carbon piles that have a characteristic impedance of fifty ohms.

Very high power modules are water cooled (for cooling of the carbon piles) and are very large. Typical RF power loads are also very expensive and difficult to maintain.

Therefore, it can be seen that it would be quite desirable to provide an improved RF power load.

SUMMARY

In carrying out the principles of the present disclosure, in accordance with an embodiment thereof, a radio frequency power load and associated method are described below. An example of the power load is a waveguide with one conductor immersed in an ionized fluid, and with another conductor connected to a container which contains the fluid.

In one aspect, an RF power load apparatus is provided. The apparatus may include a container and a fluid having an ion source therein. The container may surround the fluid. One conductor may be immersed in the fluid and a second conductor may be electrically connected to the container. The fluid may be water, the ion source may be a salt, and the container may form a waveguide.

In another aspect, an RF transmission system is provided which may include an RF transmitter and an RF amplifier connected to the transmitter. An RF power load apparatus may be connected to the amplifier. The apparatus may include an ionized fluid surrounded by a container. A conductor may be immersed in the fluid and another conductor may be electrically connected to the container. Both conductors may be electrically connected to the fluid.

In yet another aspect of the invention, a method of dissipating power generated by an RF transmission system is provided. The method may include constructing a waveguide of an RF power load apparatus. The waveguide may include an ionized fluid in a container. The method may also include immersing a conductor in the fluid, connecting another conductor to the container, connecting both conductors to an amplifier of the transmission system, and then converting RF power into heat in the fluid.

These and other features, advantages and benefits will become apparent to one of ordinary skill in the art upon careful consideration of the detailed description of representative examples below and the accompanying drawings, in which similar elements are indicated in the various figures using the same reference numbers.

BRIEF DESCRIPTION OF THE DRAWINGS

FIG. **1** is a representative view of an RF transmission system which can benefit from the principles of this disclosure.

FIG. **2** is a representative side view of an RF power load apparatus that may be used with the system of FIG. **1**.

FIG. **3** is a representative side view of the RF power load apparatus immersed in a container of fluid.

FIG. **4** is a representative perspective view of another configuration of the RF power load apparatus.

FIG. **5** is a representative side view of the RF power load apparatus with one RF input and two RF outputs.

FIG. **6** is a representative side view of the RF power load apparatus with one RF input and no RF outputs.

FIG. **7** is a representative side view of the RF power load apparatus with one RF input and one RF output.

FIG. **8** is a representative side view of the RF power load apparatus with one RF input and two RF outputs with one RF output used as an RF sampler port.

FIG. **9** is a representative side view of the RF power load apparatus with one RF input and an RF sampler port.

FIG. **10** is a representative side view of the RF power load apparatus with one RF input and two RF outputs with one RF output used as an RF sampler port and positioned differently than in FIG. **8**.

DETAILED DESCRIPTION

It is to be understood that embodiments are described below merely as examples of useful applications of the principles of this disclosure, which is not limited to any specific details of these embodiments.

Referring initially to FIG. **1**, an RF transmission system **10** is representatively illustrated. In the system **10**, a transmitter **16** is connected to an amplifier **14**, which is connected to an antenna **12**. Although the system **10** is depicted as being used for RF transmission, it will be appreciated that the system could include a receiver, in which case the transmitter **16** could instead be a transceiver, if desired.

Referring additionally now to FIG. **2**, an RF power load apparatus **20** for use with the RF transmission system **10** of FIG. **1** is representatively illustrated. Of course, the apparatus **20** could be used with other types of RF transmission systems, if desired.

As depicted in FIG. **2**, the apparatus **20** includes an input connector **60** used to releasably connect a coax (coaxial cable) **40** to the apparatus. However, it is not required for a coax **40** or connector **60** to be used. Any cable suitable for transmission of RF signals may be connected directly to the apparatus **20** by a different connector, soldering, clamps, etc. in keeping with the principles of this disclosure.

The input connector **60** may be used to receive the RF signals from the RF transmitter **16**. The connector **60** includes two conductors **24**, **26** that receive RF power from the transmitter **16** and transfer the RF power into a waveguide **22** of the apparatus **20**. Conductor **24** is immersed in a fluid **32** contained in a container **34** and is in electrical contact with the fluid **32**. Conductor **26** is shown electrically connected to the container **34** and secured via screws **18**. However, it is not necessary for the connector **60** to be secured to the container using screws **18**. For example, the connector **60** may be soldered, clamped, etc. to the container.

The fluid **32** contained within the container **34** may be an ionized liquid that provides certain electrical impedance between the container and the conductor **24**. The size (e.g. length, shape, thickness, etc.), material composition, and

position of the conductors **24**, **28** may be adjusted or "tuned" for a selected frequency. Also, the position of the conductor **24** in a wall of the container **34** effects the tuning of the waveguide **22** for a selected frequency.

FIG. **4** shows coordinates X and Y as being distances from edges of the container **34**. The coordinates X, Y generally determine the position of the conductors **24**, **26** in the waveguide **22**. The coordinates X, Y can be varied to change the position of the conductors **24**, **26** thereby tuning the waveguide **22** for a selected frequency.

The size (e.g. length, shape, thickness, etc.) and material composition of the container **34** can also be varied so as to "tune" the waveguide **22** for a selected frequency. Additionally, a composition of fluids **32**, **50** may be a mixture of various materials and/or fluids and the mixture may be "tuned" for a selected frequency.

The fluids **32**, **50** are preferably entirely, or mostly, water. Thus, this component of the apparatus **20** is readily available and inexpensive. The ion source **56** in the fluids **32**, **50** is preferably a salt (such as NaCl), which is also readily available and inexpensive.

However, it should be understood that other types of fluids and ion sources, and combinations thereof, may be used in keeping with the principles of the disclosure. For example, a gel could be used for the fluids **32**, **50**, etc.

The container **34** is preferably made of a conductive material, such as aluminum. The conductors **24**, **26** are preferably metal.

When the RF power is transmitted through the conductors **24**, **26**, the fluid **30** provides impedance between the conductors and, as a result, the RF power is dissipated into the fluid as heat. Due to the mass of the fluid **30**, temperature increase in the fluid is not instantaneous.

Thus, the RF power is dissipated in a controlled, safe and reliable manner. The quantity of the fluid **30** and the mixture of components therein may be conveniently adjusted to produce a desired impedance and heat absorbing mass to dissipate virtually any expected level of RF power. Hundreds of kilowatts of RF power can easily be dissipated using the apparatus **20**.

An output connector **62** may be used to releasably connect a coax (coaxial cable) **42** to the apparatus **20**. This output connector **62** may be used to output RF signals received from the RF transmitter and transferred through the apparatus to the output connector **62**. However, it is not required for a coax **42** or a connector **62** to be used. Any cable suitable for transmission of RF signals may be connected directly to the apparatus **20** by a different connector, soldering, clamps, etc. in keeping with the principles of this disclosure.

The connector **62** includes two conductors **28**, **30** that outputs RF power (e.g. signals) from the waveguide **22** of the apparatus **20**. Conductor **28** is immersed in the fluid **32** and is in electrical contact with the fluid. Conductor **30** is shown connected to the container **34** via screws **18**. Other attachments means may also be used to secure conductor **30** to the container **34**.

Connector **62** allows the apparatus to be used as an RF frequency attenuator. When used as an attenuator, the waveguide **22** of the apparatus **20** behaves like a high-pass filter. All frequencies below a cut-off frequency are attenuated while all frequencies above the cut-off frequency are propagated through the waveguide **22** and output from the connector **62** into coax **42**.

The output connector **62** may also be used as an RF sampler port for determining the RF power being received by the input connector **60** or for determining the amount of RF power dissipated as heat in the fluid **32**. To determine the RF power received at the input connector **60**, RF power measurements may be taken at the output connector **62** and, based on the known characteristics of the apparatus **20**, the RF power at the input connector **60** can be determined.

Alternatively (or in addition), if the RF power at the connector **60** is known, then the amount of RF power dissipated into the fluid **32** as heat can be determined by measuring the RF power at the output connector **62** and calculating the difference between the two RF power values.

In one example of the apparatus **20**, the apparatus includes a rectangular tube shaped container **34** made of aluminum. The inner dimensions of the container **34** are 9.75 cm×3.81 cm×60 cm. The ends of the container **34** are closed with aluminum end plates **36**, **38**. A hole, 0.75 cm in diameter, is drilled in the wall of the rectangular tube shaped container **34**, close to one of the ends **36**, **38** of the container **34**.

Adjusting the coordinates X, Y (see FIG. **4**) optimizes a location of the hole and provides an impedance match to ensure maximum RF power transfer between the RF transmitter **16** and the apparatus **20**. A type-N Radio Frequency (RF) connector may be used as the interface between the apparatus **20** and the RF transmitter **16**. A cylindrical conductor **24** can be attached to a center conductor of the type-N connector and inserted into the container through the hole. However, it is not required that a type-N RF connector be used. Any other suitable connector may be used in keeping with the principles of the current disclosure.

This conductor **24** is used to transfer the RF signals from the RF transmitter **16** to the apparatus **20**. The length of the probe is adjusted to provide the widest frequency bandwidth achievable. It can be readily seen that altering the size of the conductor **24** may alter the frequency bandwidth of the apparatus **20**.

For this example, the interior of the container **34** is filled with de-ionized water. An ion source is added to the water by dissolving a small amount of table salt (approximately 0.22 g) in the water. The resulting fluid **32** (e.g. salt water) is used to dissipate the RF energy that is transferred to the apparatus **20**.

For this example, 1.5 kilowatts of RF power may be continuously dissipated by the apparatus **20** while maintaining the fluid **32** at a steady operating temperature of 40 degrees Celsius. This equates to at least 0.67 watts per cubic centimeter.

However, it can readily be seen that there are several ways to increase (or decrease) the amount of heat dissipation in keeping with the principles of this disclosure. For example, increasing the operating temperature allows the heat dissipation of the apparatus **20** to be increased. Additionally, an anti-freeze liquid may be added to the fluid **32** to increase the operating temperature of the apparatus **20**.

Immersing the apparatus **20** in another fluid **50** as shown in FIG. **3** allows the heat dissipation of the apparatus **20** to be greatly increased. Additionally, perforations **52** may be added to the container **34**, as seen in FIG. **3**. The perforations **52** allow fluid communication between the fluids **32**, **50** which significantly increases the RF power dissipating capability of the apparatus.

Referring now to FIGS. **5-10**, various examples of the apparatus **20** are shown. These examples illustrate different numbers of RF connectors and different positions of these connectors. In addition, the ionization of the fluids **32**, **50** may be adjusted to make the fluids more (or less) conductive.

If perforations **52** are not provided in the container **34**, then the fluid **50** may be any fluid beneficial for removing the heat generated by the apparatus **20**. The fluid **50** would not need to be an electrically conductive fluid. For example, the fluid **50** could be de-ionized water without an ion source added, an

electrically insulating stable fluorocarbon-based fluid (such as FLOURINERT made by the 3M Corporation), etc.

If perforations **52** are provided in the container **34**, then the fluid **50** would preferably have the same characteristics as the fluid **32** in order to keep the frequency performance of the apparatus **20** constant. However, is not required for the frequency performance of the apparatus to be constant. The fluid **50** may have different characteristics than the fluid **32** which would cause varying frequency performance of the apparatus as the fluids mingle together.

It can be readily seen that many more configurations of these elements as well as additional elements are possible in constructing an apparatus **20** in keeping with the principles of this disclosure.

Referring now to FIG. **5**, another output connector **64** may be used to releasably connect a coax (coaxial cable) **44** to the apparatus **20**. This output connector **64** may be used to output RF signals received from the RF transmitter and transferred through the apparatus to the output connector **64**. However, it is not required for a coax **44** or a connector **64** to be used. Any cable suitable for transmission of RF signals may be connected directly to the apparatus **20** by a different connector, soldering, clamps, etc. in keeping with the principles of this disclosure.

The connector **64** includes two conductors **46**, **48** that outputs RF power (e.g. signals) from the waveguide **22** of the apparatus **20**. Conductor **46** is immersed in the fluid **32** and is in electrical contact with the fluid. Conductor **48** is shown connected to the container **34** via screws **18**. Other attachments means may also be used to secure conductor **48** to the container **34**.

The fluid **32** contained within the container **34** may provide an electrical impedance between the container and the conductor **46**. The size (e.g. length, shape, thickness, etc.), material composition, and position of the conductors **46**, **48** may be adjusted or "tuned" for a selected radio frequency. Also, the position of the conductor **46** in a wall of the container **34** effects the tuning of the waveguide **22** for a selected radio frequency.

Connector **64** allows the apparatus to be used as an RF attenuator with a second output path. Alternatively, (or in addition to) the output connector **62** may preferably be used as an RF sampler port for determining the RF power being received by the input connector **60** or for determining the amount of RF power dissipated as heat in the fluid **32**.

To determine the RF power received at the input connector **60**, RF power measurements may be taken at the output connector **64** and, based on the known characteristics of the apparatus **20**, the RF power at the input connector **60** can be determined.

Additionally, to determine the RF power received at the output connector **62**, RF power measurements may be taken at the output connector **64** and, based on the known characteristics of the apparatus **20**, the RF power at the output connector **62** can be determined.

Alternatively (or in addition), if the RF power at the connector **60** is known, then the amount of RF power dissipated into the fluid **32** as heat can be determined by measuring the RF power at the output connector **64**, determining the RF power at the output connector **62**, and calculating the difference between the RF power values a connectors **60** and **62**.

It is not required that connector **64** be positioned between connectors **60**, **62**, as shown in FIG. **5**. It may be positioned anywhere on the container **34** in keeping with the principles of this disclosure.

Referring now to FIG. **6**, the apparatus **20** includes a container **34** filled with fluid **32** and an RF connector **60** attached to a coax cable **40**. RF power is input to the apparatus **20** through the connector **60** and the apparatus **20** is used to dissipate all of the RF power as heat in the fluid **32**. This is typically referred to as 1-port dead-end RF power load (e.g. power dissipater).

Referring now to FIG. **7**, the apparatus **20** is similar to the apparatus of FIG. **6**, except that it includes a second connector **62** attached to a second coax **42**. RF Power is received by the input connector **60**, transmitted through the waveguide **22**, attenuated by the waveguide, and output to the coax **42**. A portion of RF power is dissipated as heat into the fluid **32**. This is typically referred to as a 2-port pass-through power attenuator.

Referring now to FIG. **8**, the apparatus **20** is similar to the apparatus of FIG. **7**, except that it includes a third connector **64** attached to a third coax **44**. In this example, the connector **64** is used as a −30 dB RF sampler port and allows the RF power at connectors **60**, **62**, and the RF power dissipated as heat into the fluid **32** to be determined.

Notice that the conductor **46** of connector **64** is shown to be a different size to the one shown in FIG. **5**. This illustrates that the conductors of connectors **60**, **62**, **64** may be adjusted to "tune" the RF frequency performance of the apparatus **20**. Also, it is not required that the connector **64** to be a −30 dB connector to be an RF sampler port. Any other attenuation values for connector **64** may be provided in keeping with the principles of this disclosure.

In this example, the fluid **32** is highly conductive and minimizes any RF power attenuation attributed to the fluid. The apparatus **20** of FIG. **8** is typically referred to as a 2-port attenuator with RF sampler port.

Referring to FIG. **9**, the apparatus **20** is similar to the apparatus of FIG. **6**, except that it includes a coax **44** connected to connector **64** where the connector **64** is used as an RF sampler port. This is typically referred to as 1-port dead-end RF power load with RF sampler port.

Referring now to FIG. **10**, the apparatus **20** is similar to the apparatus of FIG. **8**, except that the connector **64** is positioned proximate the connector **62**, instead of connector **60**. This illustrates that the position of these connectors may be adjusted as desired to address a particular implementation in keeping with the principles of this disclosure.

It should be readily understood that the principles of this disclosure can be utilized with other frequencies as well and is not limited to only radio frequencies.

Therefore, through these and other examples of the apparatus **20**, a cost-effective power load can dissipate hundreds of kilowatts of radio frequency (or other frequencies) power in a safe and efficient manner. The variations of the apparatus **20** given above can be implemented separately or in combination to achieve a desired size, weight, and performance of the apparatus **20**.

Of course, a person skilled in the art would, upon careful consideration of the above description of representative embodiments, readily appreciate that many modifications, additions, substitutions, deletions, and other changes may be made to these specific embodiments, and such changes are within the scope of the principles of this disclosure. Accordingly, the foregoing detailed description is to be clearly understood as being given by way of illustration and example only, the spirit and scope of the present invention being limited solely by the appended claims and their equivalents.

What is claimed is:

1. A radio frequency power load apparatus, comprising:

a container;

a first fluid having an ion source therein, the first fluid being surrounded by the container;

a first conductor immersed in the first fluid;

a second conductor electrically connected to the container; and

the first and second conductors electrically connected to the first fluid;

wherein the apparatus is adjusted to a selected frequency by adjusting any one of a size, a material composition, and a position of the first conductor.

2. A radio frequency power load apparatus, comprising:

a container;

a first fluid having an ion source therein, the first fluid being surrounded by the container;

a first conductor immersed in the first fluid;

a second conductor electrically connected to the container; and

the first and second conductors electrically connected to the first fluid;

wherein the apparatus is adjusted to a selected frequency by adjusting any one of a size and a material composition of the container.

3. A radio frequency power load apparatus, comprising:

a container;

a first fluid having an ion source therein, the first fluid being surrounded by the container;

a first conductor immersed in the first fluid;

a second conductor electrically connected to the container; and

the first and second conductors electrically connected to the first fluid;

wherein greater than 0.4 watts of radio frequency power is dissipated as heat into the first fluid per each cubic centimeter of volume of the apparatus.

4. A radio frequency power load apparatus, comprising:

a container;

a first fluid having an ion source therein, the first fluid being surrounded by the container;

a first conductor immersed in the first fluid;

a second conductor electrically connected to the container; and

the first and second conductors electrically connected to the first fluid;

wherein the container is immersed in a second fluid.

5. The apparatus of claim **4**, wherein the container is perforated, the second fluid contains an ion source, and the second fluid is in fluid communication with the first fluid.

6. A radio frequency power load apparatus, comprising:

a container;

a first fluid having an ion source therein, the first fluid being surrounded by the container;

a first conductor immersed in the first fluid;

a second conductor electrically connected to the container; and

the first and second conductors electrically connected to the first fluid;

a third conductor;

and a fourth conductor;

wherein the third conductor is immersed in the first fluid and the fourth conductor is electrically connected to the container, and

wherein a first amount of radio frequency power is transmitted from the first and second conductors, through a waveguide formed by the container, and to the third and fourth conductors.

7. The apparatus of claim **6**, wherein a second amount of radio frequency power at the first and second conductors is determined by measurements at the third and fourth conductors.

8. The apparatus of claim **7**, wherein a third amount of radio frequency power is determined by calculating a difference between the first and second amounts of radio frequency power, wherein the third amount of radio frequency power is dissipated as heat in the fluid.

9. The apparatus of claim **6**, further comprising fifth and sixth conductors,

wherein the fifth conductor is immersed in the first fluid and the sixth conductor is electrically connected to the container, and

wherein a second amount of radio frequency power is transmitted from the first and second conductors, through the waveguide formed by the container, and to the fifth and sixth conductors.

10. The system of claim **9**, wherein the apparatus is adjusted to a selected frequency by adjusting any one of a size, a material composition, and a position of the fifth conductor.

11. The apparatus of claim **9**, wherein a third amount of radio frequency power at the fifth and sixth conductors is determined by measurements at the third and fourth conductors.

12. The apparatus of claim **11**, wherein a fourth amount of radio frequency power is determined by calculating a difference between the second and third amounts of radio frequency power, wherein the fourth amount of radio frequency power is dissipated as heat in the fluid.

* * * * *