US007686202B1

(12) **United States Patent**
Carter et al.

(10) **Patent No.: US 7,686,202 B1**
(45) **Date of Patent: Mar. 30, 2010**

(54) **GIMBALED-SHOULDER FRICTION STIR WELDING TOOL**

(75) Inventors: **Robert W. Carter**, Huntsville, AL (US); **Kirby G. Lawless**, Huntsville, AL (US)

(73) Assignee: **The United States of America as represented by the Administrator of the National Aeronautics and Space Administration**, Washington, DC (US)

(*) Notice: Subject to any disclaimer, the term of this patent is extended or adjusted under 35 U.S.C. 154(b) by 262 days.

(21) Appl. No.: **11/543,287**

(22) Filed: **Sep. 29, 2006**

(51) **Int. Cl.**
B23K 20/12 (2006.01)
B23K 37/00 (2006.01)

(52) **U.S. Cl.** **228/2.1**; 228/2.3

(58) **Field of Classification Search** 228/2.1, 228/2.3

See application file for complete search history.

(56) **References Cited**

U.S. PATENT DOCUMENTS

2,625,018	A *	1/1953	Dunn	464/66.1
5,697,544	A	12/1997	Wykes	
5,718,366	A *	2/1998	Colligan	228/112.1
5,893,507	A	4/1999	Ding et al.	
6,050,475	A	4/2000	Kinton et al.	
6,199,745	B1 *	3/2001	Campbell et al.	228/112.1
6,227,430	B1	5/2001	Rosen et al.	
6,237,835	B1	5/2001	Litwinski et al.	
6,484,924	B1	11/2002	Forrest	
6,543,671	B2	4/2003	Hatten et al.	
6,557,746	B2	5/2003	Ezumi et al.	
6,595,403	B2	7/2003	Okamura et al.	
6,669,075	B2	12/2003	Colligan	
6,715,665	B2	4/2004	Hirano et al.	
6,758,382	B1	7/2004	Carter	
RE39,019	E	3/2006	Tully et al.	
2003/0028281	A1	2/2003	Adams et al.	
2003/0201307	A1	10/2003	Waldron et al.	
2004/0079787	A1	4/2004	Okamoto et al.	
2005/0029330	A1	2/2005	Kohn	

FOREIGN PATENT DOCUMENTS

JP	2003181654	A *	7/2003
WO	WO 2006081819	A1 *	8/2006

* cited by examiner

Primary Examiner—Jessica L. Ward
Assistant Examiner—Jacky Yuen
(74) *Attorney, Agent, or Firm*—James J. McGroary; Peter J. Van Bergen

(57) **ABSTRACT**

A gimbaled-shoulder friction stir welding tool includes a pin and first and second annular shoulders coupled to the pin. At least one of the annular shoulders is coupled to the pin for gimbaled motion with respect thereto as the tool is rotated by a friction stir welding apparatus.

8 Claims, 2 Drawing Sheets

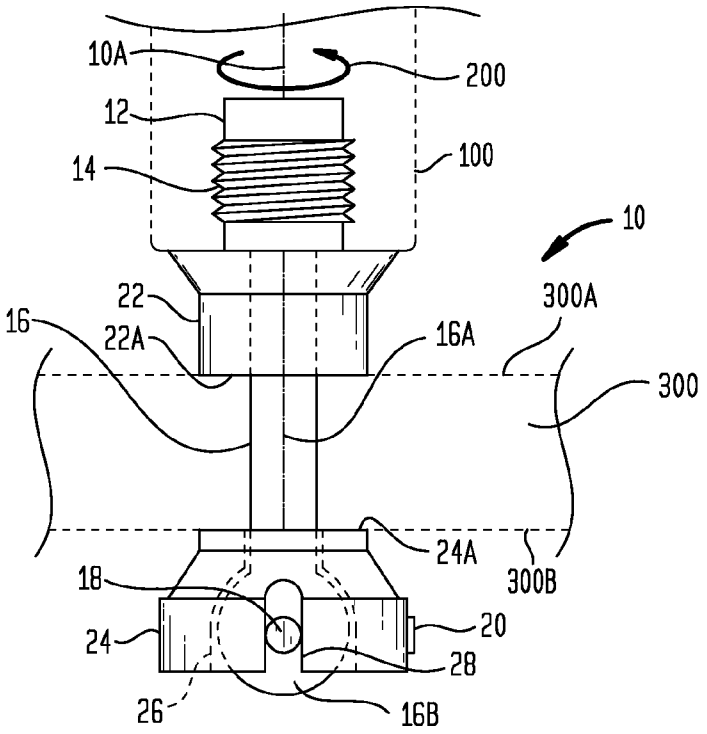

FIG. 1

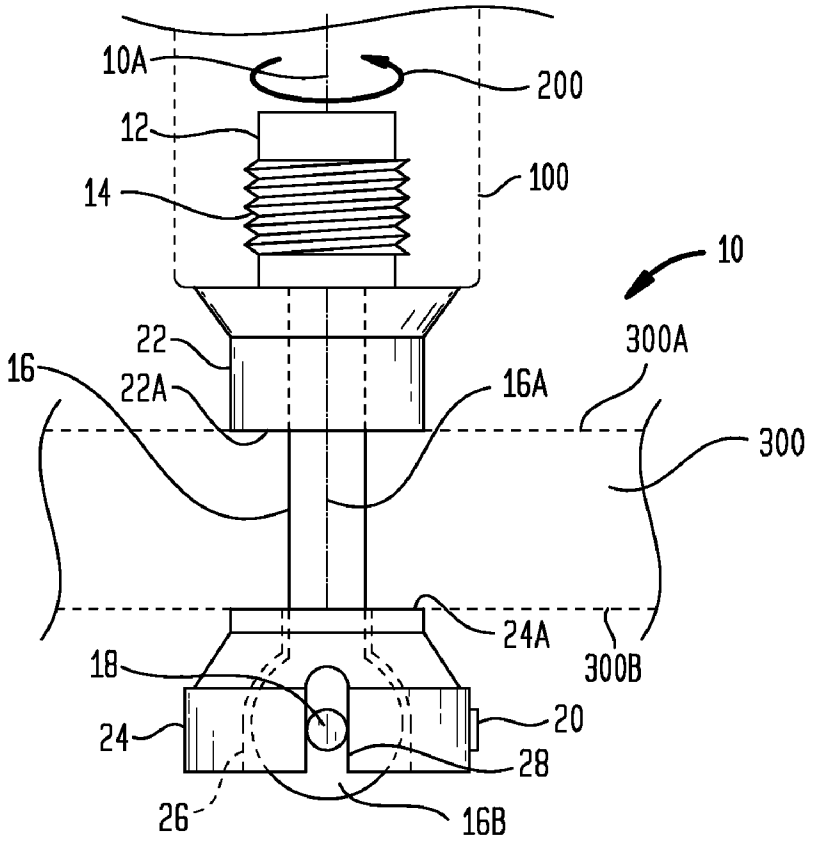
10A
200
12
14
100
10
22
300A
16
22A
16A
300
24A
18
300B
24
20
28
26
16B

FIG. 2

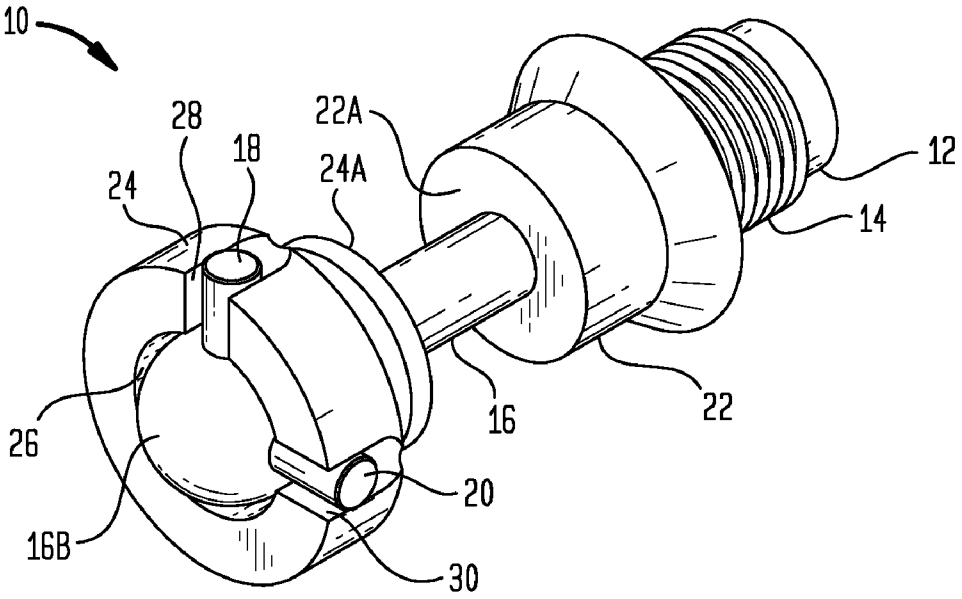
10
28
22A
18
12
24
24A
14
26
16
22
20
16B
30

FIG. 3

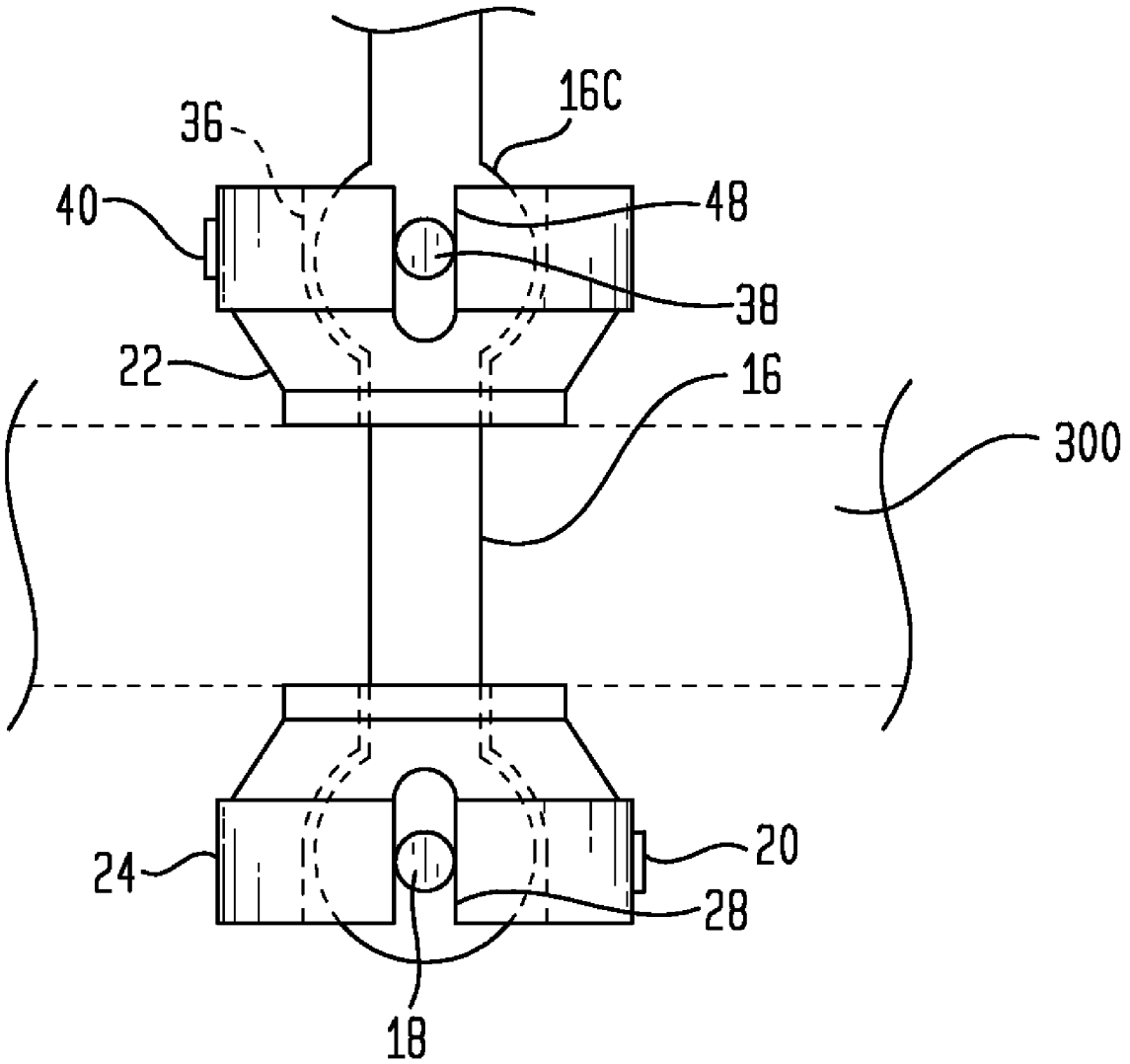

GIMBALED-SHOULDER FRICTION STIR WELDING TOOL

ORIGIN OF THE INVENTION

The invention was made by employees of the United States Government and may be manufactured and used by or for the Government for governmental purposes without the payment of any royalties.

BACKGROUND OF THE INVENTION

1. Field of the Invention

This invention relates to friction stir welding tools. More specifically, the invention is a friction stir welding tool having at least one gimbaled shoulder contacting a workpiece.

2. Description of the Related Art

Many friction stir welding (FSW) apparatus utilize a welding tool that has two spaced-apart shoulders fixedly mounted to a welding pin that is rotated about its axis by the FSW apparatus. The two shoulders rotate with the pin and ride on the respective front and back (or top and bottom) of the workpiece being welded. If the thickness of the workpiece varies as the welding tool is moved therealong, the leading edge of one or both shoulders tend to dig into the workpiece which causes excessive weld flashing to develop along the weld.

SUMMARY OF THE INVENTION

Accordingly, it is an object of the present invention to provide a friction stir welding (FSW) tool that can adapt to varying-thickness workpieces.

Another object of the present invention is to provide a FSW tool that adjusts itself to handle welds of constant thickness, tapering thickness and complex curvature joints.

Other objects and advantages of the present invention will become more obvious hereinafter in the specification and drawings.

In accordance with the present invention, a tool is provided for use in friction stir welding. The tool includes a pin and first and second annular shoulders coupled to the pin. The shoulders are spaced apart from one another along the pin's longitudinal axis. The pin is further adapted to be coupled to a friction stir welding apparatus for rotation about its longitudinal axis. At least one of the first and second annular shoulders is coupled to the pin for gimbaled motion with respect thereto.

BRIEF DESCRIPTION OF THE DRAWING(S)

Other objects, features and advantages of the present invention will become apparent upon reference to the following description of the preferred embodiments and to the drawings, wherein corresponding reference characters indicate corresponding parts throughout the several views of the drawings and wherein:

FIG. **1** is a side view of a gimbaled-shoulder friction stir welding tool in accordance with an embodiment of the present invention;

FIG. **2** is a perspective view of the embodiment shown in FIG. **1** illustrating the underside of the gimbaled-shoulder tool;

FIG. **3** is a side view of a two gimbaled-shoulder tool in accordance with another embodiment of the present invention.

DESCRIPTION OF THE PREFERRED EMBODIMENT(S)

Referring now to the drawings, simultaneous reference will be made to FIGS. **1** and **2** where a gimbaled-shoulder friction stir welding (FSW) tool in accordance with an embodiment of the present invention is shown and is referenced generally by numeral **10**. Tool **10** will be coupled to a FSW apparatus, a portion of which is illustrated in phantom lines and is referenced by numeral **100**. In general, FSW apparatus **100** will cause tool **10** to rotate about its longitudinal axis **10**A as indicated by arrow **200**. A variety of such FSW apparatus are well known in the art. Accordingly, it is to be understood that the particular type of FSW apparatus is not a limitation of the present invention.

Typically, tool **10** has a base or support **12** that facilitates the coupling of tool **10** to FSW apparatus **100**. By way of non-limiting example, support **12** can have threads **14** formed thereon that thread into FSW apparatus **100**. Of course, support **12** can be coupled to FSW apparatus **100** in other ways without departing from the scope of the present invention.

Coupled to and extending from support **12** is a pin **16** such that pin **16** will rotate about its axis **16**A with support **12** when FSW apparatus **100** is operated. Axis **16**A is coincident with the longitudinal axis **10**A of tool **10**. In the illustrated embodiment, pin **16** terminates at its distal end **16**B with a bulbous or ball shape from which two indexing pins **18** and **20** extend radially outward therefrom. More specifically, indexing pins **18** and **20** are oriented 90° away from each other in a plane perpendicular to axis **16**A. The function of indexing pins **18** and **20** will be explained further below.

Tool **10** further includes two annular shoulders **22** and **24** separated from one another along pin **16**. Upper shoulder **22** is fixedly coupled to support **12** and/or pin **16** for rotation therewith about axis **16**A. Upper shoulder **22** is disposed annularly about pin **16**. The lower surface **22**A of upper shoulder **22** will ride on the top surface **300**A of a workpiece **300** (shown in phantom lines) to be welded as pin **16** rotates.

Opposing upper shoulder **22** is lower shoulder **24** also disposed annularly about pin **16** with its upper surface **24**A riding along the bottom surface **300**B of workpiece **300**. Rather than being fixedly coupled to pin **16**, lower shoulder **24** is loosely coupled to pin **16** such that lower shoulder **24** can rotate with pin **16** while simultaneously experiencing gimbaled motion relative to pin **16**. To achieve this function in the illustrated embodiment, lower shoulder **24** defines a socket **26** (FIG. **2**) that engages the ball-shaped distal end **16**B of pin **16** as indexing pins **18** and **20** engage correspondingly-positioned slotted notches **28** and **30** in lower shoulder **24**. The engagement of indexing pins **18** and **20** in respective slotted notches **28** and **30** links lower shoulder **24** to pin **16** such that it will rotate with pin **16**. At the same time, the loose engagement of indexing pins **18** and **20** in slotted notches **28** and **30** allows lower shoulder **24** to gimbal on distal end **16**B of pin **16** when forces are applied to upper surface **24**A.

In operation, as FSW apparatus **100** rotates support **12**/pin **16**, upper shoulder **22** and lower shoulder **24** rotate therewith as indexing pins **18** and **20** engage notches **28** and **30**, respectively. If the thickness of workpiece **300** changes as FSW apparatus **100** moves tool **10** therealong, the changing thickness of workpiece **300** applies forces to upper surface **24**A of lower shoulder **24** with the applied forces causing lower shoulder **24** to gimbal. For example, if workpiece **300** gets thicker as tool **10** moves therealong, a downward force (i.e., where "downward" is relative to the illustrated orientation of tool **10**) will be applied to the leading edge of upper surface **24**A causing it to pitch downward so that the leading edge

does not dig into workpiece **300**. Conversely, if workpiece **300** gets thinner as tool **10** moves therealong, a downward force (i.e., where "downward" is relative to the illustrated orientation of tool **10**) will be applied to the trailing edge of upper surface **24**A causing it to pitch upward so that the trailing edge does not dig into workpiece **300**. In this way, excessive weld flashing is eliminated.

The present invention is not limited to the specifics of the illustrated embodiment. For example, the gimbaled motion between lower shoulder **24** and pin **16** can be provided by a number of other constructions without departing from the scope of the present invention. Also, the tool of the present invention could be constructed so that the upper shoulder thereof was capable of gimbaled motion as opposed to the lower shoulder as in the illustrated embodiment. Still further, depending on the construction of the FSW apparatus to which the tool is to be mounted, it is possible that the tool of the present invention does not require a support (i.e., support **12**). That is, the tool of the present invention might only include the pin and two annular shoulders.

The advantages of the present invention are numerous. The gimbaled-shoulder friction stir welding tool automatically adapts to workpiece variations without requiring any complex control systems. Thus, the tool provides a simple and inexpensive way to improve the quality of friction stir welds.

Although the invention has been described relative to a specific embodiment thereof, there are numerous variations and modifications that will be readily apparent to those skilled in the art in light of the above teachings. For example, as illustrated in FIG. **3**, the tool of the present invention could be constructed with two gimbaled shoulders. That is, upper shoulder **22** could also be loosely coupled to pin **16** to rotate therewith while simultaneously being capable of experiencing gimbaled motion with respect thereto. By way of an illustrative example, this can be achieved in the same way as previously described for lower shoulder **24**. Accordingly, pin **16** can include an intermediately-positioned bulbous or ball-shaped region **16**C that is engaged by a socket **36** defined in upper shoulder **22**. Indexing pins **38** and **40** extending radially from region **16**C are engaged in slotted notches formed in upper shoulder **22** in a similar fashion to that previously described for lower shoulder **24**. Note that only one such slotted notch (i.e., slotted notch **48**) is visible in FIG. **3**. It is therefore to be understood that, within the scope of the appended claims, the invention may be practiced other than as specifically described.

What is claimed as new and desired to be secured by Letters Patent of the United States is:

1. A tool for use in friction stir welding, comprising:

a support body adapted to be coupled to a friction stir welding apparatus for rotation thereby;

a pin fixedly coupled to and extending from said support body for rotation therewith;

first and second annular shoulders coupled to said pin and spaced apart from one another, said first and second annular shoulders adapted to be disposed on opposing sides of a workpiece;

at least one of said first and second annular shoulders defining a socket;

said pin including a bulbous portion thereof for engagement in said socket; and

a plurality of indexing pins fixed to and extending radially outward from said bulbous portion for loose engagement with slotted notches formed in said at least one of said first and second annular shoulders, wherein said at least one of said first and second annular shoulders is coupled to said pin for simultaneous rotation therewith and gimbaled motion with respect thereto such that changes in thickness of the workpiece changes forces applied to said at least one of said first and second annular shoulders to directly control relative orientations between said first and second annular shoulders as said pin rotates.

2. A tool as in claim **1** wherein each of said first and second annular shoulders is coupled to said pin for rotation therewith.

3. A tool for use in friction stir welding, comprising:

a pin having a longitudinal axis, said pin being adapted to be coupled to a friction stir welding apparatus for rotation about said longitudinal axis;

first and second annular shoulders coupled to said pin and spaced apart from one another, said first and second annular shoulders adapted to be disposed on opposing sides of a workpiece;

at least one of said first and second annular shoulders defining a socket;

said pin including a portion thereof for engagement in said socket; and

a plurality of indexing pins fixed to and extending radially outward from said portion of said pin engaged in said socket and perpendicular to said longitudinal axis for loose engagement with slotted notches formed in said at least one of said first and second annular shoulders, wherein said at least one of said first and second annular shoulders is coupled to said pin for simultaneous rotation therewith and gimbaled motion with respect thereto such that changes in thickness of the workplace changes forces applied to said at least one of said first and second annular shoulders to directly control relative orientations between said first and second annular shoulders as said pin rotates.

4. A tool as in claim **3** wherein each of said first and second annular shoulders is coupled to said pin for rotation therewith.

5. A tool for use in friction stir welding, comprising:

a pin having a longitudinal axis, said pin being adapted to be coupled to a friction stir welding apparatus for rotation about said longitudinal axis, said pin having a distal end that is at least partially spherical;

a first annular shoulder fixedly coupled to said pin for rotation therewith, said first annular shoulder opposing and separated from said distal end of said pin;

a second annular shoulder forming a socket disposed about said pin, said first and second annular shoulders adapted to be disposed on opposing sides of a workpiece; and

a plurality of indexing pins fixed to and extending radially outward from said distal end and perpendicular to said longitudinal axis for loose engagement with slotted notches formed in said second annular shoulder, wherein said second annular shoulder is loosely coupled to said distal end of said pin to simultaneously provide (i) rotation with said pin, and (ii) gimbaled motion relative to said distal end such that changes in thickness of the workpiece changes forces applied to said second annular shoulder to directly control orientation of said second annular shoulder as said pin rotates.

6. A tool as in claim **1** wherein said plurality of indexing pins comprises two indexing pins oriented with an angle of 90° therebetween.

7. A tool as in claim **3** wherein said plurality of indexing pins comprises two indexing pins oriented with an angle of 90° therebetween.

8. A tool as in claim **5** wherein said plurality of indexing pins comprises two indexing pins oriented with an angle of 90° therebetween.

* * * * *