US008132772B1

(12) **United States Patent**
Thomas et al.

(10) **Patent No.: US 8,132,772 B1**
(45) **Date of Patent: Mar. 13, 2012**

(54) **LINEAR AND/OR CURVILINEAR RAIL MOUNT SYSTEM**

(75) Inventors: **Jackie D. Thomas**, Huntsville, AL (US); **Lawanna L. Harris**, Huntsville, AL (US)

(73) Assignee: **The United States of America as represented by the Administrator of the National Aeronautics and Space Administration**, Washington, DC (US)

(*) Notice: Subject to any disclaimer, the term of this patent is extended or adjusted under 35 U.S.C. 154(b) by 428 days.

(21) Appl. No.: **12/567,451**

(22) Filed: **Sep. 25, 2009**

(51) **Int. Cl.**
A47B 97/00 (2006.01)

(52) **U.S. Cl.** **248/500**; 248/429

(58) **Field of Classification Search** 248/500, 248/49, 200, 220.21, 221.11, 222.13, 223.41, 248/225.11, 231.9, 424, 429
See application file for complete search history.

(56) **References Cited**

U.S. PATENT DOCUMENTS

3,337,172	A *	8/1967	Jackson	248/222.51
4,593,824	A *	6/1986	Pfeifer	211/57.1
5,406,455	A	4/1995	Devenish, III	
5,644,470	A	7/1997	Benedict et al.	
6,119,878	A *	9/2000	Zen	211/94.01
7,032,862	B2	4/2006	Landes et al.	
7,307,851	B2	12/2007	Dimarco	
2003/0116682	A1*	6/2003	Finco et al.	248/49
2004/0017667	A1	1/2004	Nasu et al.	
2007/0221595	A1	9/2007	Chen	
2008/0121762	A1	5/2008	Slatosch et al.	
2008/0239688	A1	10/2008	Casey et al.	
2009/0129885	A1*	5/2009	Csik et al.	411/103
2010/0294906	A1*	11/2010	Klepack et al.	248/231.9

* cited by examiner

Primary Examiner — Ramon Ramirez
(74) *Attorney, Agent, or Firm* — Peter J. Van Bergen; James J. McGroary

(57) **ABSTRACT**

One or more linear and/or curvilinear mounting rails are coupled to a structure. Each mounting rail defines a channel and at least one cartridge assembly is engaged in the channel. Each cartridge assembly includes a housing that slides within the channel. The housing defines a curvilinearly-shaped recess longitudinally aligned with the channel when the housing is in engagement therewith. The cartridge assembly also includes a cleat fitted in the recess for sliding engagement therealong. The cleat can be coupled to a fastener that passes through the mounting rail and the housing when the housing is so-engaged in the channel. The cleat is positioned in the recess by a position of the fastener.

27 Claims, 4 Drawing Sheets

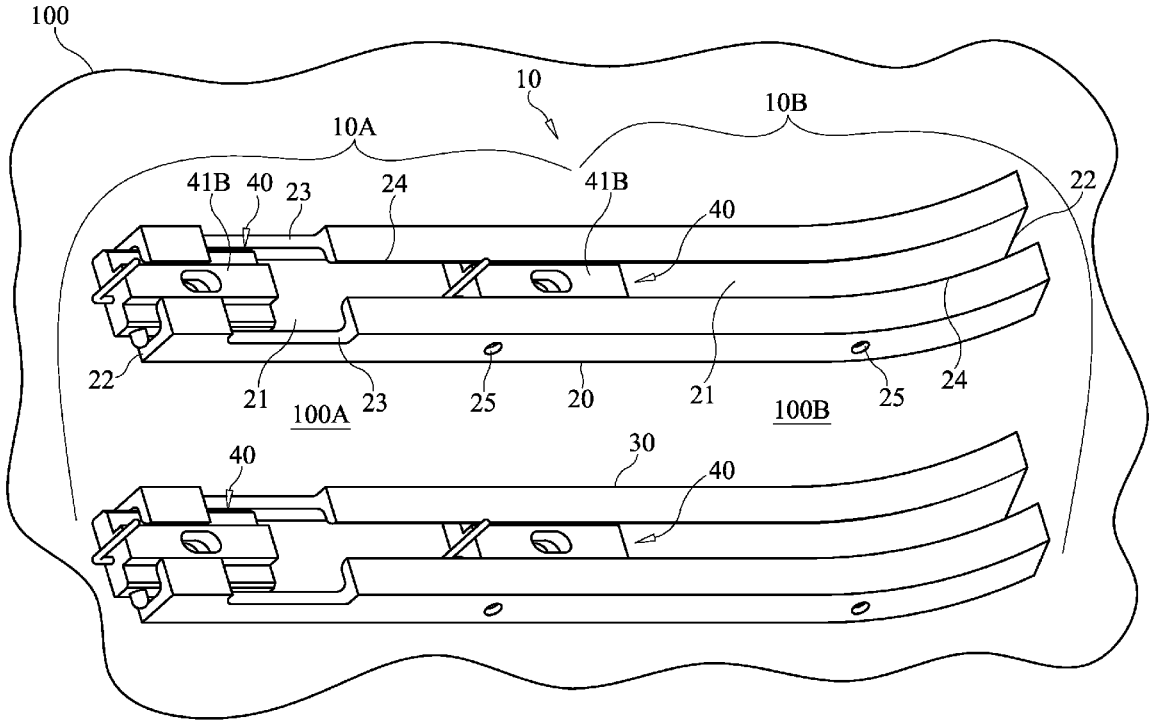

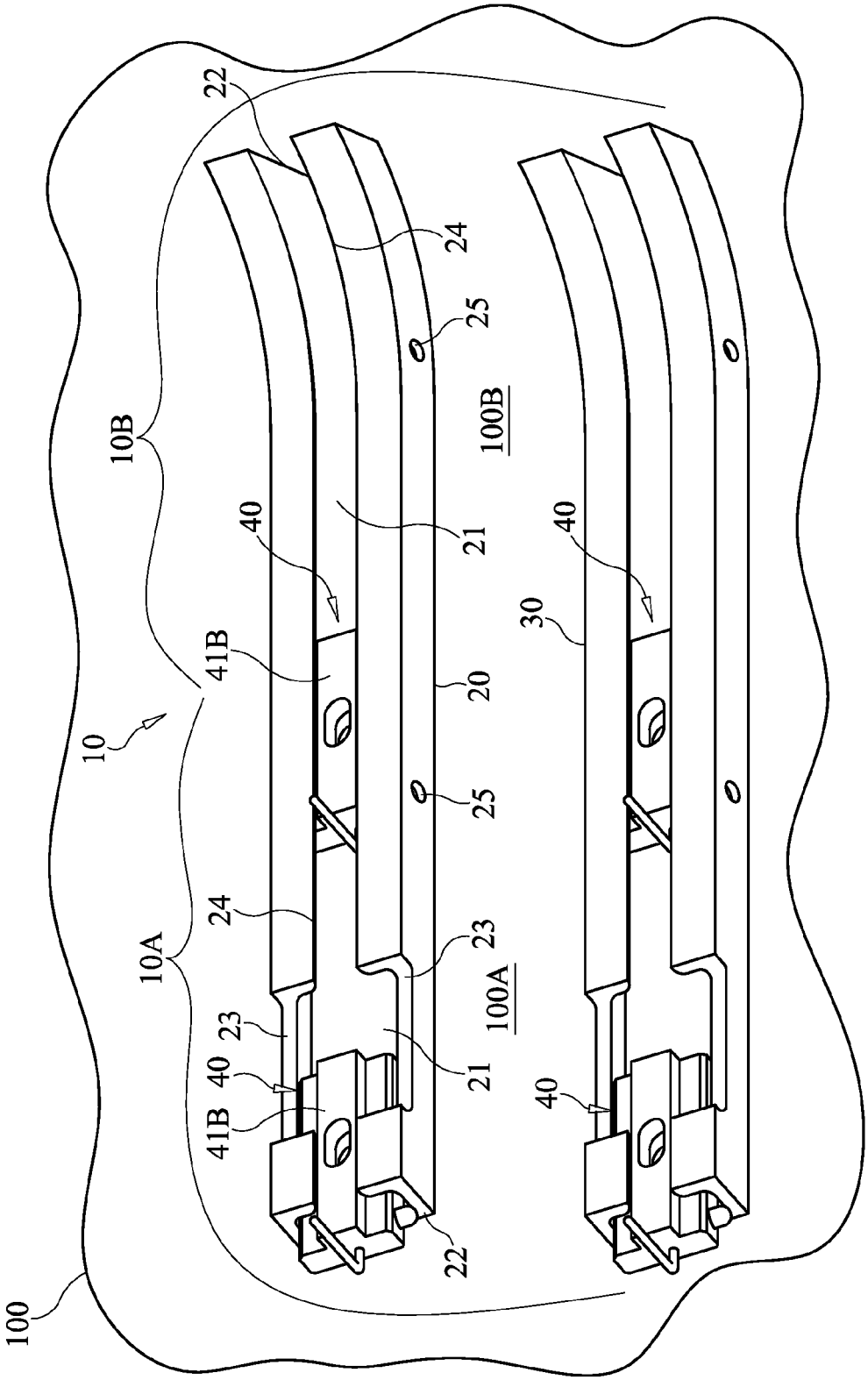
100
10
10A
10B
22
24
25
100B
40
21
41B
20
25
24
23
100A
23
40
41B
21
22
40
30
40

FIG. 1

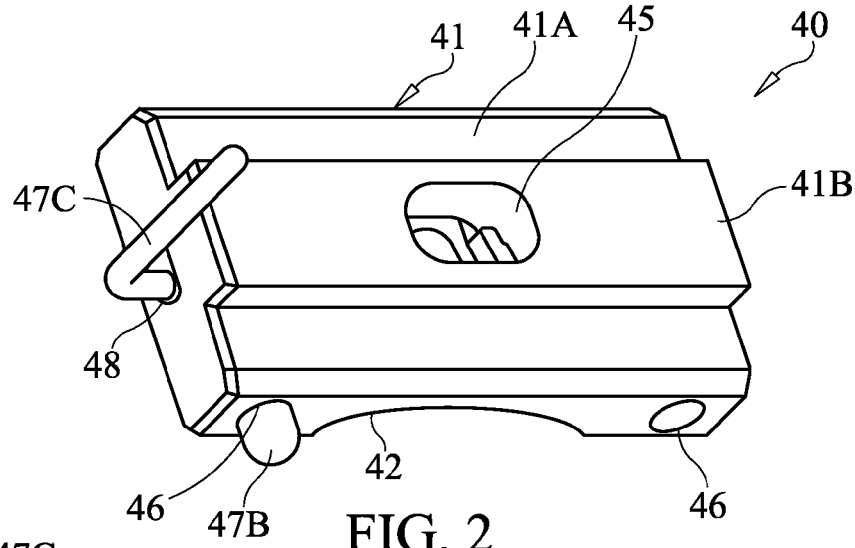

FIG. 2

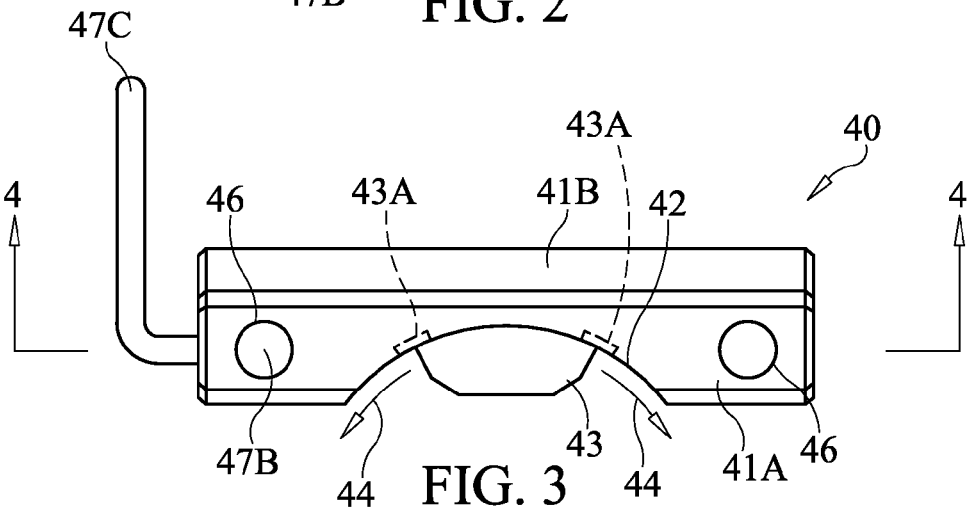

FIG. 3

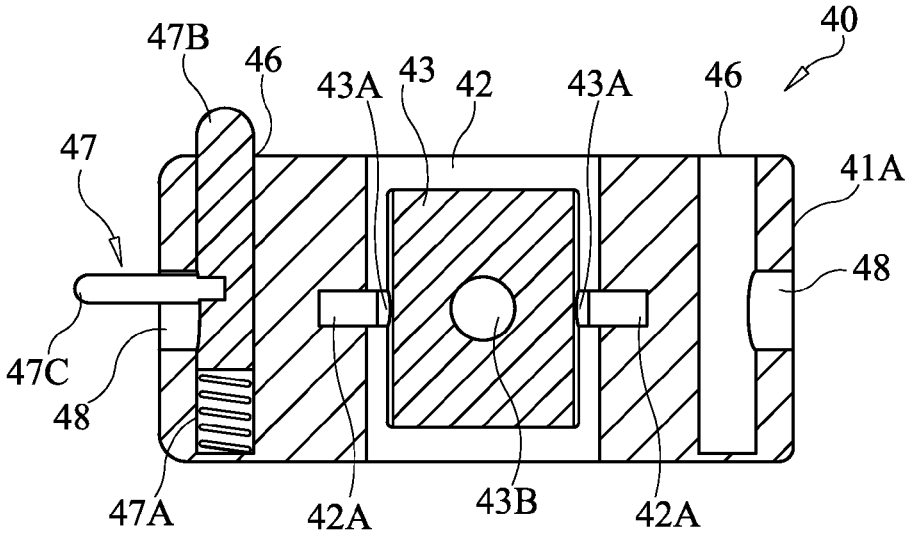

FIG. 4

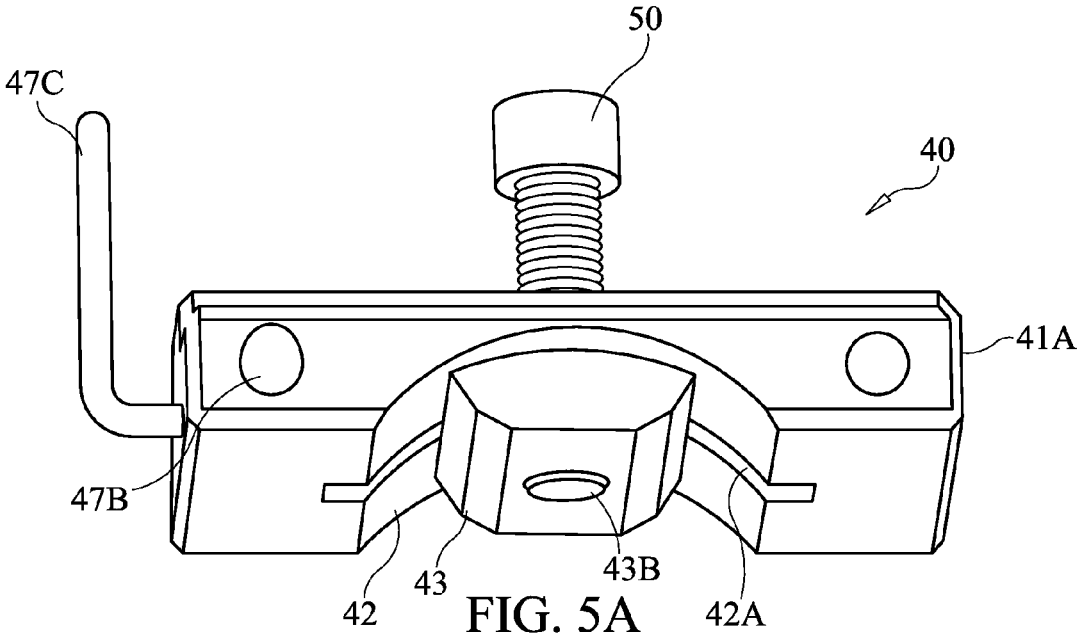

FIG. 5A

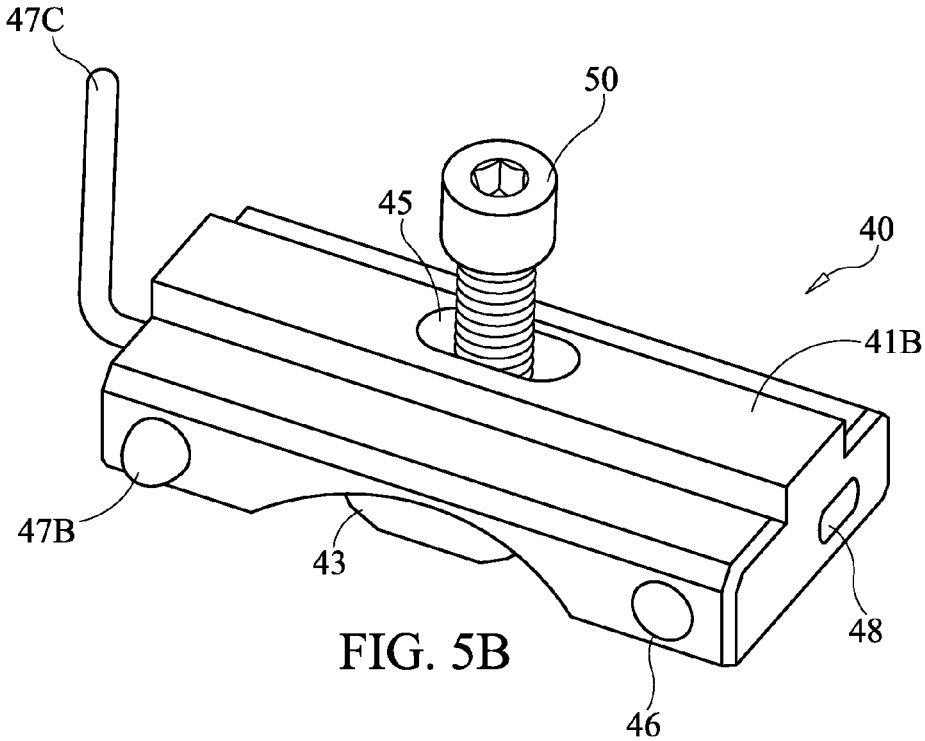

FIG. 5B

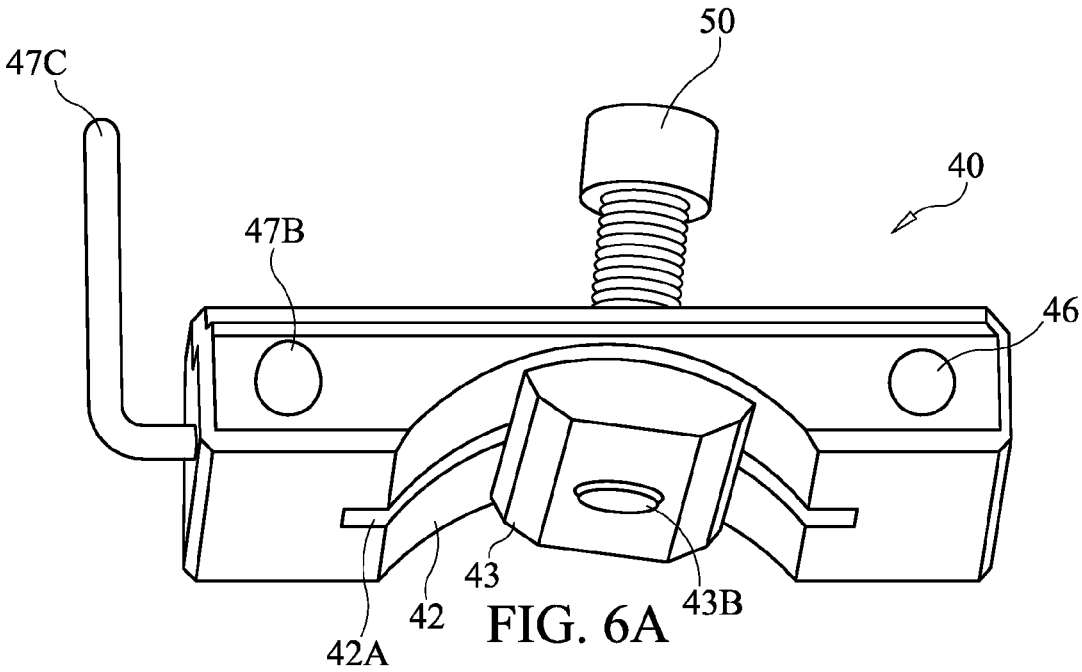

FIG. 6A

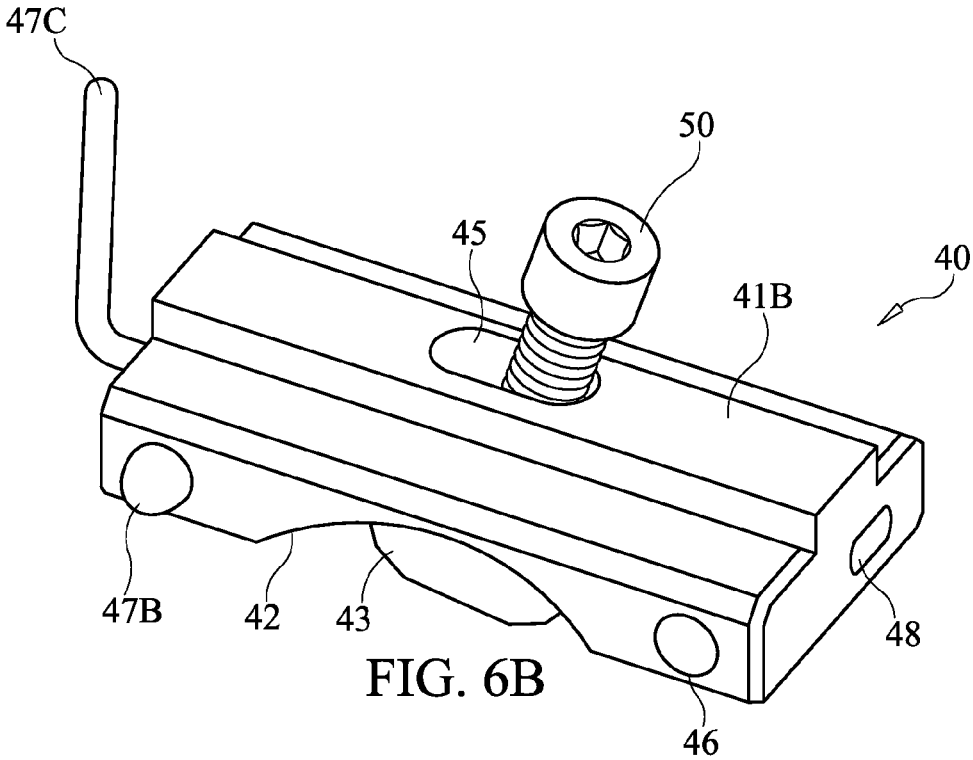

FIG. 6B

LINEAR AND/OR CURVILINEAR RAIL MOUNT SYSTEM

ORIGIN OF THE INVENTION

The invention was made by employees of the United States Government and may be manufactured and used by or for the Government for governmental purposes without the payment of any royalties.

BACKGROUND OF THE INVENTION

1. Field of the Invention

This invention relates to rail-based mounting system. More specifically, the invention is a rail mount system using linear and/or curvilinear rails that allows a component to be mounted thereto without the use of tools.

2. Description of the Related Art

Frequently, components or assemblies are mounted in a structure by first attaching some type of mounting rail or rails to the structure, and then attaching a component or assembly to the rail(s) using some type of fastener requiring the use of a fastening tool. In some installation applications, very little room exists thereby making the use of a fastening tool very difficult. Typically, this difficulty is addressed by using one person to hold the component/assembly in place while another attempts to fasten the component/assembly to the mounting rail(s).

Another problem with component or assembly mounting is that an existing structure does not always present sufficient flat installation surfaces as the only available mounting regions present irregularly-shaped surfaces. In these situations, some type of custom or "jury-rigged" mounting is used thereby increasing the cost and/or complexity of the mounting, as well as possibly introducing mounting integrity issues/concerns.

SUMMARY OF THE INVENTION

Accordingly, it is an object of the present invention to provide system for mounting a component or assembly to a structure that does not require the use of tools for such mounting.

Another object of the present invention is to provide a system for mounting a component or assembly to an irregularly-shaped surface.

Other objects and advantages of the present invention will become more obvious hereinafter in the specification and drawings.

In accordance with the present invention, a system for mounting a component includes at least one mounting rail coupled to a structure. Each mounting rail defines a channel. At least one cartridge assembly is engaged in the channel. Each cartridge assembly includes a housing for sliding engagement within the channel. The housing defines a curvilinearly-shaped recess longitudinally aligned with the channel when the housing is in engagement therewith. The cartridge assembly also includes a cleat fitted in the recess for sliding engagement therealong. The cleat can be coupled to a fastener that passes through the mounting rail and the housing when the housing is so-engaged in the channel. The cleat is positioned in the recess by a position of the fastener.

BRIEF DESCRIPTION OF THE DRAWING(S)

Other objects, features and advantages of the present invention will become apparent upon reference to the following description of the preferred embodiments and to the drawings, wherein corresponding reference characters indicate corresponding parts throughout the several views of the drawings and wherein:

FIG. **1** is a perspective view of a parallel-rail mount system in accordance with embodiment of the present invention;

FIG. **2** is an isolated perspective view of an embodiment of a cartridge assembly used in the present invention;

FIG. **3** is a side view of the cartridge assembly;

FIG. **4** is a cross-sectional view of the cartridge assembly taken along line **4-4** in FIG. **3**;

FIG. **5**A is an isolated perspective view of the recess side of a cartridge assembly with its threaded cleat positioned by a threaded bolt cooperating therewith when the cartridge assembly resides in a linear section of a rail;

FIG. **5**B is an isolated perspective view of the cartridge assembly in FIG. **5**A from the side thereof that the threaded bolt passes through;

FIG. **6**A is an isolated perspective view of the recess side of a cartridge assembly with its threaded cleat positioned by a threaded bolt cooperating therewith when the cartridge assembly resides in a curvilinear section of a rail; and

FIG. **6**B is an isolated perspective view of the cartridge assembly in FIG. **6**A from the side thereof that the threaded bolt passes through.

DESCRIPTION OF THE PREFERRED EMBODIMENT(S)

Referring now to the drawings and more particularly to FIG. **1**, a rail mount system in accordance with an embodiment of the present invention is shown and is referenced generally by numeral **10**. In general, mount system **10** will be coupled to some structure **100**, the choice of which is not a limitation of the present invention. Indeed, a great advantage of the present invention is that the mounting surface **100**A of structure **100** can be planar or curved/irregular. That is, mount system **10** can be essentially in a plane that is parallel to a planar surface of structure **100**, or mount system **10** can be shaped to in a curvilinear fashion to adapt to an irregular surface region of structure **100**. Still further, mount system **10** could be constructed to transition from a planar portion of structure **100** to an irregular surface region thereof. Accordingly, FIG. **1** illustrates mount system **10** as having a linear portion **10**A and a curvilinear portion **10**B.

In the illustrated embodiment, mount system **10** includes two parallel rails **20** and **30** that are each coupled to structure **100** such that rails **20** and **30** remain parallel to one another along the lengths thereof. Note that this parallel relationship is maintained in both portions **10**A and **10**B of mount system **10**. Rails **20** and **30** are typically identical in size and construction to simplify fabrication and/or installation in procedures. However, the present invention is not so limited as rails **20** and **30** could be different. Further, some installations might only require the use of one rail. Accordingly, it is to be understood that the novel features of mount system **10** can be used in a variety of embodiments without departing from the scope of the present invention.

In the illustrated embodiment, rails **20** and **30** are the same so that a description of rail **20** will be sufficient for an understanding of the present invention. Rail **20** is coupled to structure **100** by any conventional means (e.g., adhered, attached, integrated, etc.), the choice of which is not a limitation of the present invention. Rail **20** is made of a rigid material (e.g., metal, composite, etc.) and defines a channel **21** (e.g., a C-shaped channel as illustrated) along the operative length thereof. That is, rail **20** could include one or more appendages (not shown) to facilitate the coupling thereof to structure **100**. As illustrated, the operative length of rail **20** spans portions **10**A and **10**B. Rail **20** defines one or more entrances for one or more cartridge assemblies **40** (two of which are installed in

rail **20**). For example, one or both ends **22** of rail **20** could be open to expose channel **21**. Additionally or alternatively, rail **20** can have a notch **23** (or several ones thereof distributed along the length of rail **20**) formed therein such that cartridge assembly **40** can be inserted therethrough for positioning in channel **21**. Rail **20** is linear along portion **10**A of mount system **10** and is curved along portion **10**B. For both portions **10**A and **10**B, C-shaped channel **21** defines a slot **24** along the illustrated operative portion of rail **20**. The purpose of slot **24** will become more apparent later herein.

Each cartridge assembly **40** is designed to slidingly engage channel **21** once cartridge assembly **40** is positioned therein. Referring additionally now to FIGS. **2-4**, various isolated views of an embodiment of cartridge assembly **40** are presented. Cartridge assembly **40** includes a rigid housing **41** sized/shaped to slidingly engage channel **21**. More specifically, in the illustrated embodiment, housing **41** includes a main body **41**A and a longitudinal rib **41**B where main body **41**A slides in channel **21** while rib **41**B slides in slot **24** (FIG. **1**). On the opposing side of housing **41** and aligned with rib **41**B is curved recess **42** formed in housing **41** such that recess **42** is longitudinally aligned in channel **21** when cartridge assembly is positioned therein. Cooperating with recess **42** is a shaped cleat **43** such that cleat **43** can be positioned at a variety of locations along recess **42** as illustrated by arrows **44** in FIG. **3**. To keep cleat **43** squarely positioned in recess **42**, cleat **43** includes a rib **43**A that cooperates or rides in a slot **42**A formed along recess **42**. Cleat **43** further defines a female threaded portion **43**B that is aligned with hole **45** in **41**B. More specifically, hole **45** is larger that the opening end of threaded portion **43**B such that threaded portion **43**B remains in full communication with hole **45** for a variety of locations **44** of cleat **43**.

Cartridge assembly **40** can also be equipped with a mechanism(s) to lock it into a desired position along rail **20**. For example, in the illustrated embodiment, housing **40** defines one (or two) transverse wells **46** to support a lock pin arrangement **47** designed to cooperate with a hole (or recess) **25** formed in rail **20**. Lock pin arrangement **47** is a spring-loaded pin assembly that includes longitudinally-aligned spring **47**A and pin **47**B. A manually-operated release bar **47**C is coupled to pin **47**B and is passed through a slot **48** of housing **41**. When spring **47**A is compressed, cartridge assembly **40** is slid in channel **21** until pin **47**B is aligned with hole **25** whereby pin **47**B is pushed into locked engagement with hole **25** by the force of spring **47**A. When release bar **47**C is moved to compress spring **47**A, pin **47**B is pulled within housing **41** to facilitate release of cartridge assembly **40** from its locked engagement with hole **25** of rail **20**. Note that lock pin arrangement **47** can be placed at either end of housing **41** or at both ends thereof without departing from the scope of the present invention. Further, it is to be understood that other types of lock-and-release mechanisms could be used without departing from the scope of the present invention.

As mentioned above, the present invention allows a component to be mounted on planar or curved/irregularly-shaped structures without the use of any tools. This feature is of great value for large number of applications. These capabilities will be better understood with reference to FIGS. **5**A, **5**B, **6**A, and **6**B where cartridge assembly **40** is again illustrated in isolation. Referring first to FIGS. **5**A and **5**B, cartridge assembly **40** is illustrated as it would appear when cooperating with a linear portion of a mounting rail (e.g., rail **20**). In accordance with the present invention, cartridge assembly **40** is first attached to a component (not shown to maintain clarity of illustration) that is to be mounted to rail **20**. To do this, a threaded bolt or other fastener **50** is passed through a mounting hole (not shown) of the component. Threaded bolt **50** is then passed through hole **45** and threaded into threaded portion **43**B of cheat **43**. In this way, cartridge assembly **40** is now coupled to the component that is to be mounted to rail **20**. Typically, additional cartridge assemblies will be coupled to the component. For example, the parallel rail example illustrated in FIG. **1** will typically make use of four such cartridge assemblies for a stable installation. Note that for a planar mounting surface utilizing linear rails, cleat **43** is centrally positioned along the length of recess **42** with bolt **50** extending perpendicularly to rib **41**B and out of slot **24** (not shown in FIGS. **5**A and **5**B).

The present invention also readily adapts to use with curvilinear rails as will be readily apparent by reference to FIGS. **6**A and **6**B. That is, as cartridge assembly **40** encounters a curve in a mounting rail (e.g., rail **20**), cleat **43** slides along recess **42** as governed by bolt **50** which is coupled to the component (not shown) experiencing the curve in the mounting rail. The loose maintenance of bolt **50** in the larger hole **45** allows bolt **50** to be angularly positioned relative to rib **41**B as best seen in FIG. **6**B.

The advantages of the present invention are numerous. One or more cartridge assemblies are coupled to a component that is be mounted to a structure. This assembly step is readily accomplished "off line" in a setting that is not space limited. One or more linear and/or curvilinear mounting rails are installed where needed. Then, the component with its cartridge assembly(ies) coupled thereto is simply positioned in a rail's channel and the component is slid to its installation position where it can be locked in place. Such locking can be readily integrated into the rail mount system in a variety of ways. No tools are required to mount the component to the rails. Accordingly, the present invention could be especially valuable where component mounting space is at a premium (e.g., avionics applications, spacecraft applications, computer or other electronic applications where space/size is at a premium, etc.).

Although the invention has been described relative to a specific embodiment thereof, there are numerous variations and modifications that will be readily apparent to those skilled in the art in light of the above teachings. It is therefore to be understood that, within the scope of the appended claims, the invention may be practiced other than as specifically described.

What is claimed as new and desired to be secured by Letters Patent of the United States is:

1. A system for mounting a component, comprising:

first and second mounting rails arranged parallel to one another, each of said first and second mounting rails adapted to be coupled to a structure, each of said first and second mounting rails defining a channel therein; and

a plurality of cartridge assemblies with each of said cartridge assemblies engaged in one said channel, each of said cartridge assemblies including

(i) a housing for sliding engagement within said channel, said housing defining a curvilinearly-shaped recess longitudinally aligned with said channel when said housing is in said engagement therewith, and

(ii) a cleat fitted in said recess for sliding engagement therealong, said cleat being adapted to be coupled to a fastener that is adapted to pass through one of said first and second mounting rails and said housing when said housing is so-engaged in said channel associated therewith, wherein said cleat is positioned in said recess by a position of the fastener.

2. A system as in claim **1**, wherein each of said first and second mounting rails is linear.

3. A system as in claim **1**, wherein each of said first and second mounting rails is curvilinear.

4. A system as in claim **1**, wherein said plurality of cartridge assemblies comprise at least four of said cartridge assemblies.

5. A system as in claim 1, wherein an end of each of said first and second mounting rails is open such that said channel associated therewith can slidingly receive at least one of said cartridge assemblies through said end.

6. A system as in claim 1, wherein each of said first and second mounting rails has at least one notch formed at a position along the length thereof for allowing one of said cartridge assemblies to be received into said channel associated therewith.

7. A system as in claim 1, further comprising means for releasably locking each of said cartridge assemblies at a position along the length of said channel so-engaged.

8. A system for mounting a component, comprising:

first and second mounting rails arranged parallel to one another, each of said first and second mounting rails adapted to be coupled to a structure, each of said first and second mounting rails defining a channel therein, said channel being C-shaped along at least a portion of said channel's length to define a longitudinal slot along said portion; and

a plurality of cartridge assemblies with each of said cartridge assemblies engaged in one said channel, each of said cartridge assemblies including

(i) a housing for sliding engagement within said channel, said housing defining a curvilinearly-shaped recess longitudinally aligned with said slot and facing away therefrom when said housing is in said engagement with said channel, and

(ii) a cleat fitted in said recess for sliding engagement therealong, said cleat being adapted to be coupled to a fastener that is adapted to pass through one of said first and second mounting rails and said housing when said housing is so-engaged in said channel associated therewith, wherein said cleat is positioned in said recess by a position of the fastener.

9. A system as in claim 8, wherein each of said first and second mounting rails is linear.

10. A system as in claim 8, wherein each of said first and second mounting rails is curvilinear.

11. A system as in claim 8, wherein said plurality of cartridge assemblies comprise at least four of said cartridge assemblies.

12. A system as in claim 8, wherein an end of each of said first and second mounting rails is open such that said channel associated therewith can slidingly receive at least one of said cartridge assemblies through said end.

13. A system as in claim 8, wherein each of said first and second mounting rails has at least one notch formed at a position along the length thereof for allowing one of said cartridge assemblies to be received into said channel associated therewith.

14. A system as in claim 8, further comprising means for releasably locking each of said cartridge assemblies at a position along the length of said channel so-engaged.

15. A system for mounting a component, comprising:

first and second mounting rails arranged parallel to one another, each of said first and second mounting rails adapted to be coupled to a structure, each of said first and second mounting rails defining a channel therein, said channel being C-shaped along at least a portion of said channel's length to define a longitudinal slot along said portion; and

a plurality of cartridge assemblies with each of said cartridge assemblies engaged in one said channel, each of said cartridge assemblies including

(i) a housing for sliding engagement within said channel, said housing defining a curvilinearly-shaped recess longitudinally aligned with said slot and facing away therefrom when said housing is in said engagement with said channel, said housing further defining a hole in communication with a central region of said recess,

(ii) a cleat fitted in said recess for sliding engagement therealong and in alignment with said slot, said cleat including a threaded opening aligned with said hole in said housing, and

(iii) a threaded fastener passed through said hole and in loose engagement therewith for threaded engagement with said threaded opening in said cleat, wherein said threaded fastener extends through said slot when said housing is so-engaged in said channel, and wherein said cleat is positioned in said recess by a position of said threaded fastener.

16. A system as in claim 15, wherein each of said first and second mounting rails is linear.

17. A system as in claim 15, wherein each of said first and second mounting rails is curvilinear.

18. A system as in claim 15, wherein said plurality of cartridge assemblies comprise at least four of said cartridge assemblies.

19. A system as in claim 15, wherein an end of each of said first and second mounting rails is open such that said channel associated therewith can slidingly receive at least one of said cartridge assemblies through said end.

20. A system as in claim 15, wherein each of said first and second mounting rails has at least one notch formed at a position along the length thereof for allowing one of said cartridge assemblies to be received into said channel associated therewith.

21. A system as in claim 15, further comprising means for releasably locking each of said cartridge assemblies at a position along the length of said channel so-engaged.

22. A system for mounting a component, comprising:

at least one mounting rail adapted to be coupled to a structure, each said mounting rail defining a channel therein; and

at least one cartridge assembly engaged in said channel, each said cartridge assembly including

(i) a housing for sliding engagement within said channel, said housing defining a curvilinearly-shaped recess longitudinally aligned with said channel when said housing is in said engagement therewith, and

(ii) a cleat fitted in said recess for sliding engagement therealong, said cleat being adapted to be coupled to a fastener that is adapted to pass through said rail and said housing when said housing is so-engaged in said channel, wherein said cleat is positioned in said recess by a position of the fastener.

23. A system as in claim 22, wherein said rail is linear.

24. A system as in claim 22, wherein said rail is curvilinear.

25. A system as in claim 22, wherein at least one end of said rail is open such that said channel can slidingly receive said cartridge assembly through said end.

26. A system as in claim 22, wherein said rail has at least one notch formed at a position along the length thereof for allowing said cartridge assembly to be received into said channel.

27. A system as in claim 22, further comprising means for releasably locking said cartridge assembly at a position along the length of said channel so-engaged.

* * * * *