US007116098B1

(12) **United States Patent**
Alhorn et al.

(10) **Patent No.: US 7,116,098 B1**
(45) **Date of Patent: Oct. 3, 2006**

(54) **SYSTEM PROVIDING LIMIT SWITCH FUNCTION WITH SIMULTANEOUS ABSOLUTE POSITION OUTPUT**

(75) Inventors: **Dean C. Alhorn**, Huntsville, AL (US); **David E. Howard**, Hazel Green, AL (US); **Dennis A. Smith**, Athens, AL (US)

(73) Assignee: **The United States of America as represented by the Administrator of the National Aeronautics and Space Administration**, Washington, DC (US)

(*) Notice: Subject to any disclaimer, the term of this patent is extended or adjusted under 35 U.S.C. 154(b) by 0 days.

(21) Appl. No.: **11/357,454**

(22) Filed: **Feb. 16, 2006**

(51) **Int. Cl.**
G01B 7/14 (2006.01)

(52) **U.S. Cl.** **324/207.24**; 324/244

(58) **Field of Classification Search** 324/207.24, 324/244
See application file for complete search history.

(56) **References Cited**

U.S. PATENT DOCUMENTS

3,054,296	A	9/1962	Hargens et al.	
3,126,745	A	3/1964	Lutke	
3,184,975	A	5/1965	Lindemann et al.	
3,244,977	A	4/1966	Folsom	
3,379,972	A	4/1968	Foster et al.	
3,964,317	A	6/1976	Blanchard	
4,400,978	A	8/1983	Guay et al.	
4,497,205	A	2/1985	Zulauf et al.	
4,747,317	A	5/1988	Lara	
5,440,499	A	8/1995	Rasmussen	
6,104,328	A	8/2000	Alhorn et al.	
6,125,697	A	10/2000	Holton et al.	
6,246,228	B1	6/2001	Alhorn et al.	
6,418,788	B1	7/2002	Articolo	
6,597,167	B1 *	7/2003	Miyata et al.	324/207.17
6,628,115	B1 *	9/2003	Sasaki et al.	324/207.17
2001/0029782	A1	10/2001	Articolo	

FOREIGN PATENT DOCUMENTS

JP	11297591	A	10/1999
JP	2002162252	A	6/2002

* cited by examiner

Primary Examiner—Bot LeDynh
(74) *Attorney, Agent, or Firm*—James J. McGroary; Peter J. Van Bergen

(57) **ABSTRACT**

A limit and position sensing system includes a sensor assembly and an emitter. The sensor assembly includes first and second electrical conductors arranged in opposing parallel planes. The first electrical conductor is coiled outwardly from either end thereof in a clockwise fashion to form a first coil region and a second coil region. The second electrical conductor forms a single coil with portions of the single coil's rings lying between the first end and second end of the first electrical conductor being parallel to an axis of the first electrical conductor's plane. Ferromagnetic material is aligned with the first and second electrical conductors and spans beyond (a) the first and second ends of the first electrical conductor, and (b) the portions of the rings of the second electrical conductor's single coil that lie between the first end and second end of the first electrical conductor. The emitter is spaced apart from the sensor assembly and transmits a periodic electromagnetic wave towards the sensor assembly.

18 Claims, 7 Drawing Sheets

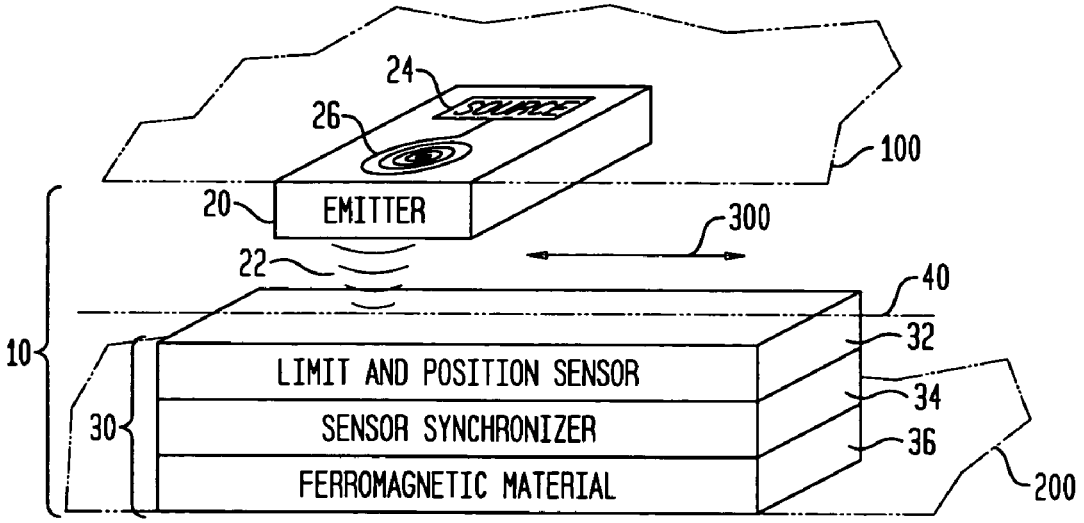

FIG. 1

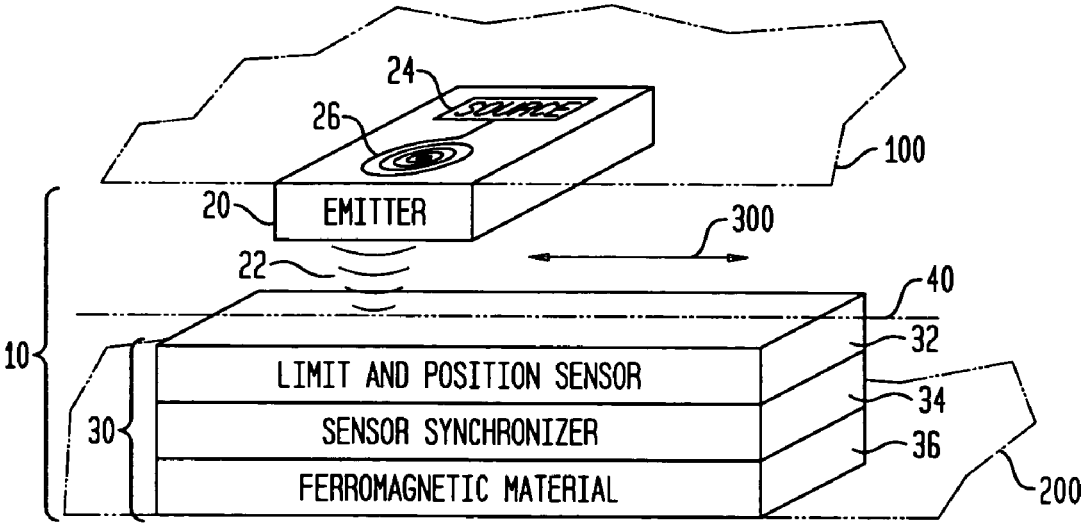
24
26
100
20
EMITTER
300
22
40
32
10
LIMIT AND POSITION SENSOR
34
30
SENSOR SYNCHRONIZER
36
FERROMAGNETIC MATERIAL
200

FIG. 2

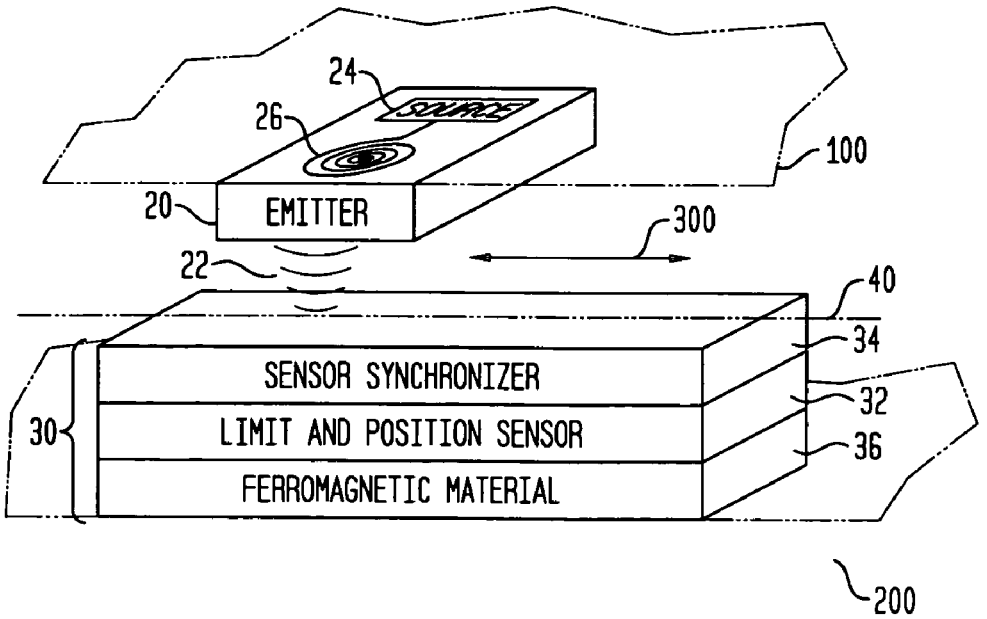
24
26
100
20
EMITTER
300
22
40
34
SENSOR SYNCHRONIZER
32
30
LIMIT AND POSITION SENSOR
36
FERROMAGNETIC MATERIAL
200

FIG. 3

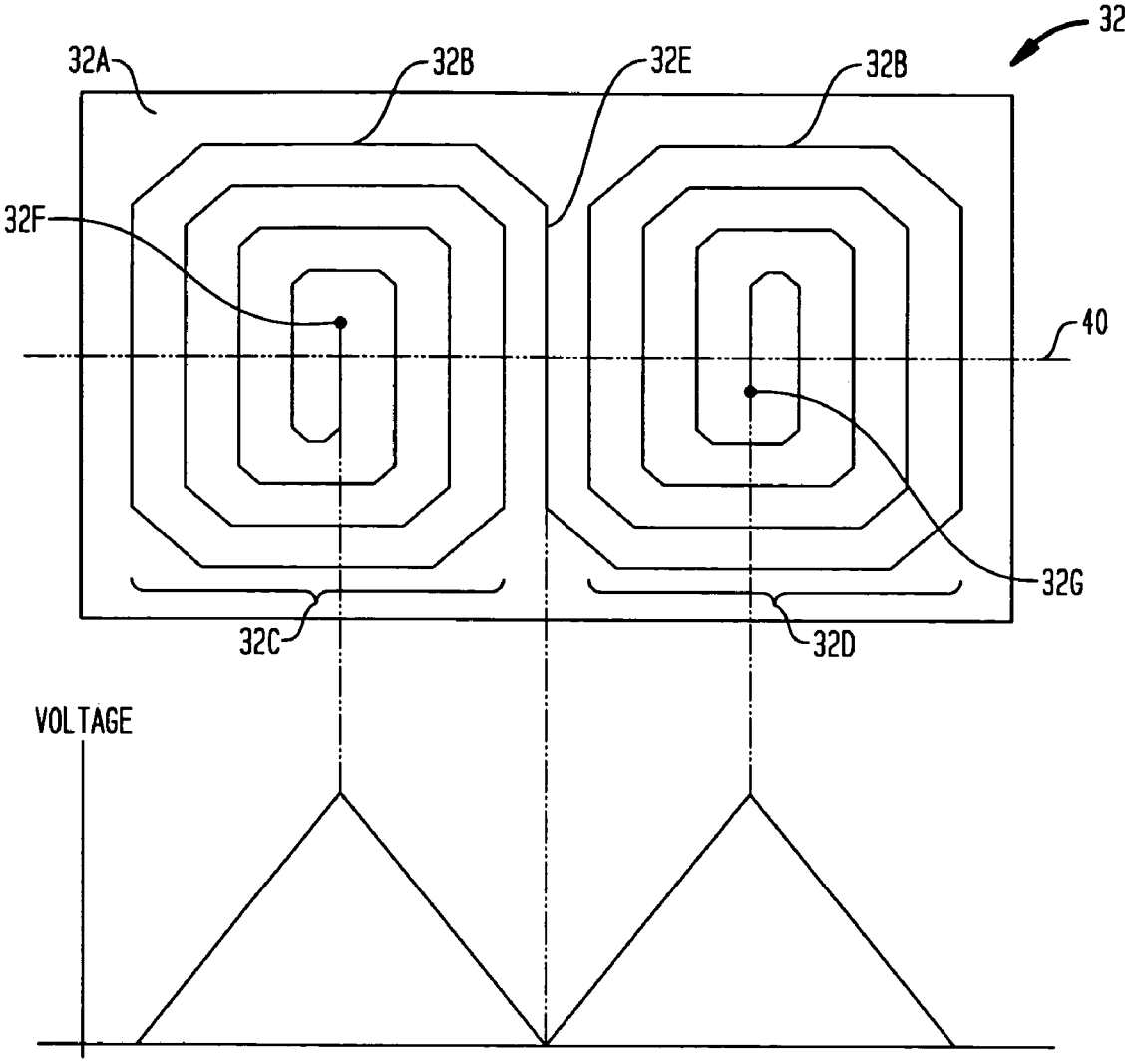

FIG. 4

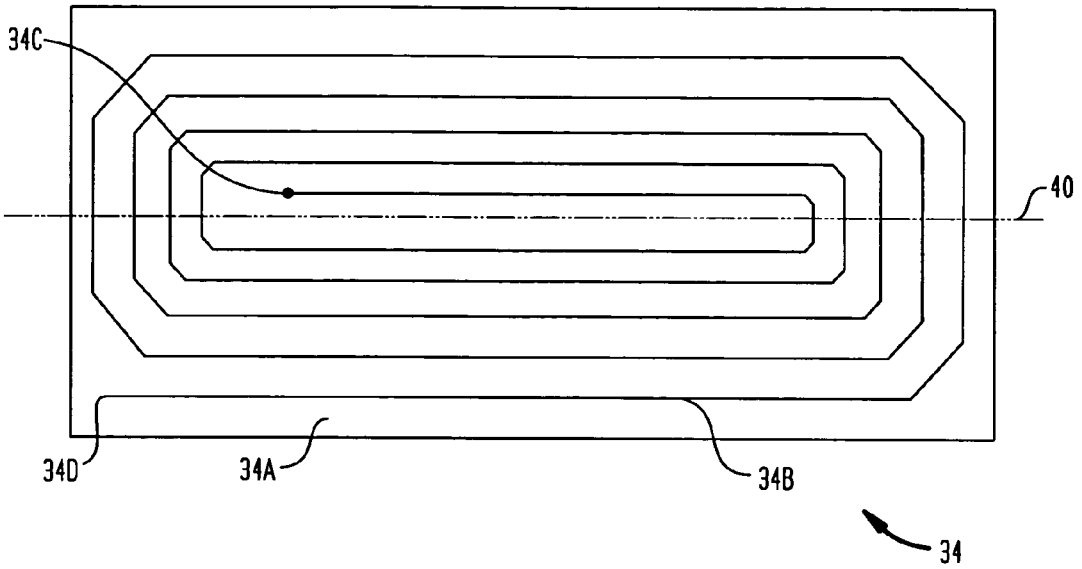

FIG. 5

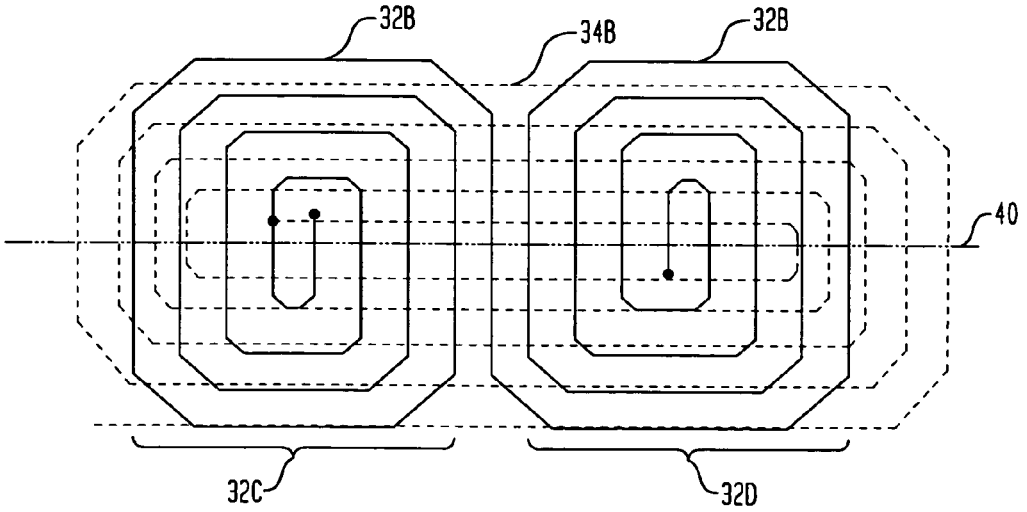

FIG. 6

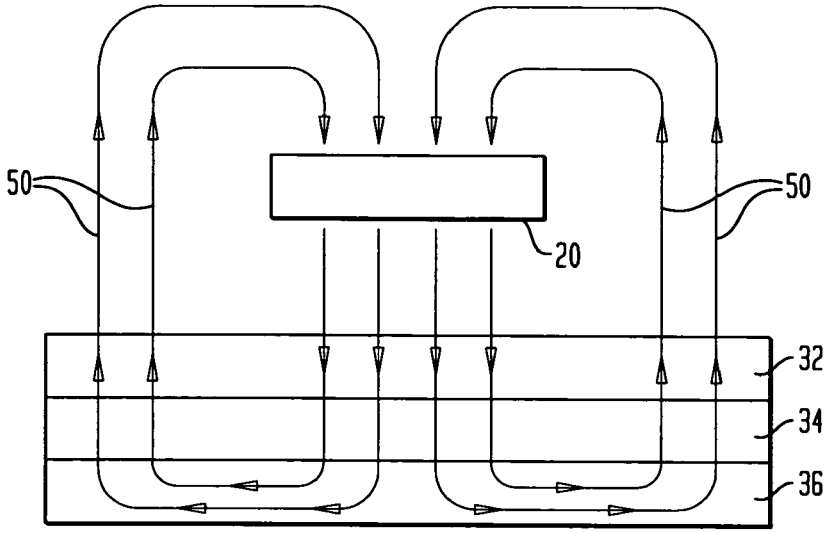

FIG. 7

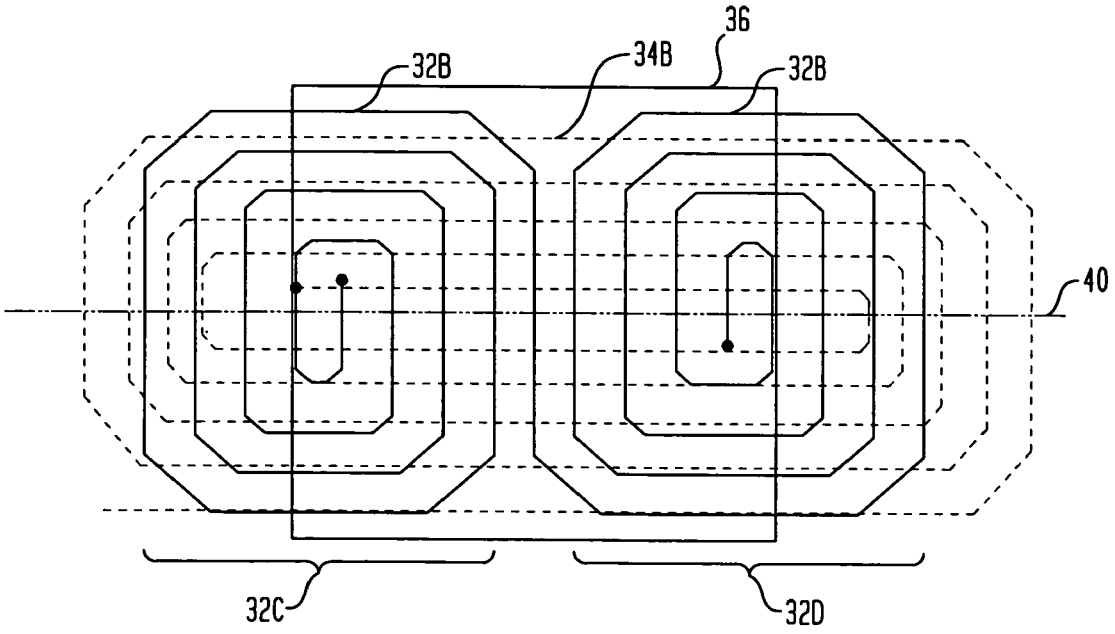

FIG. 8

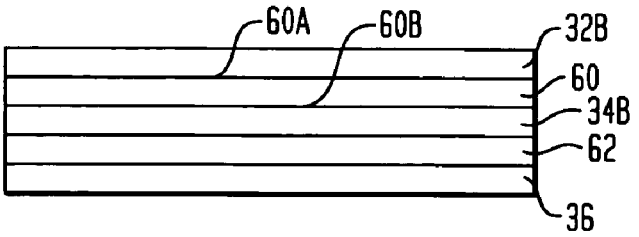

FIG. 9

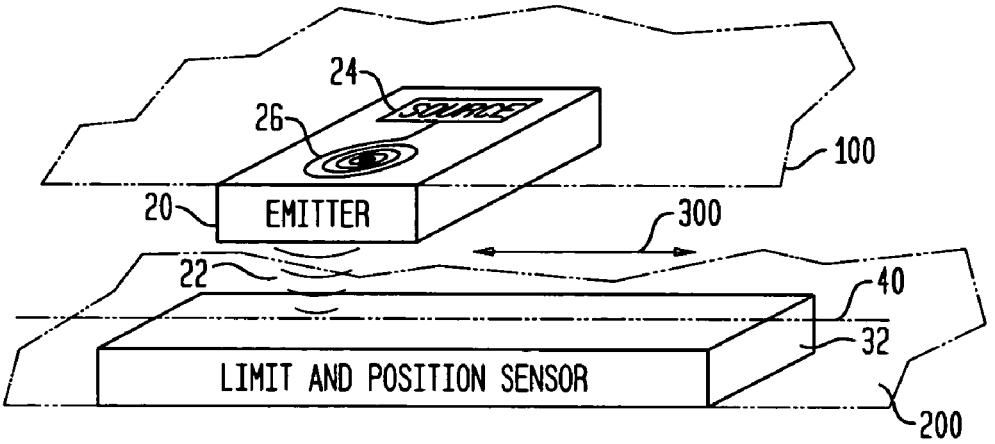

FIG. 10

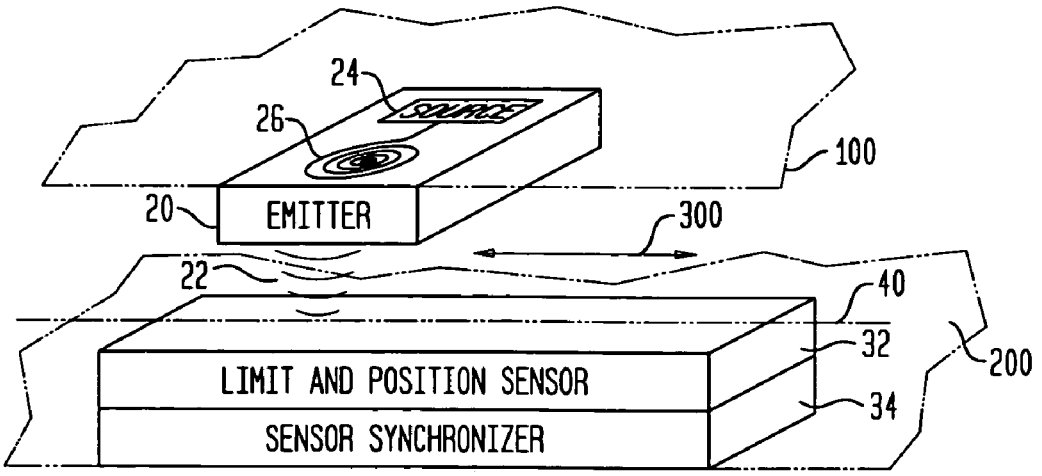

FIG. 11

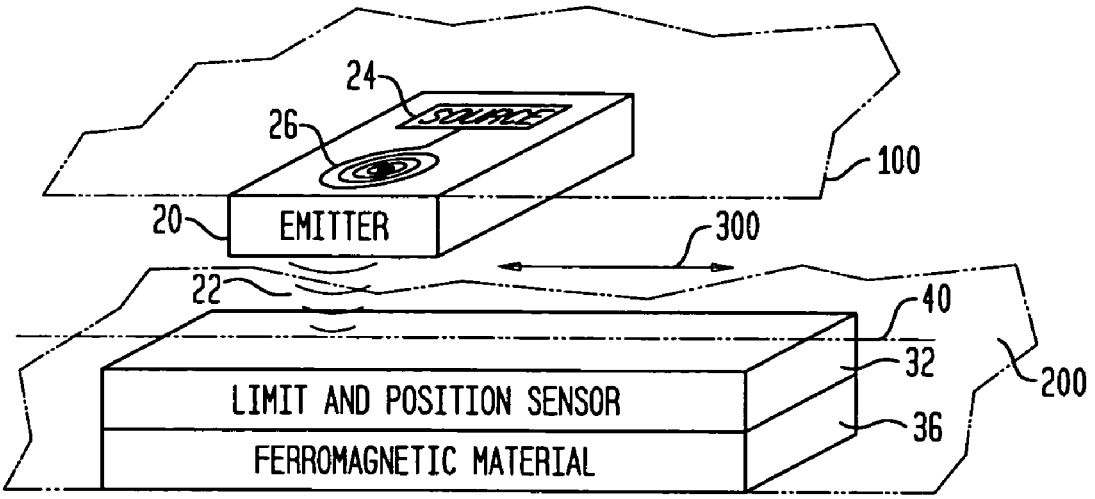
24
26
100
20
EMITTER
300
22
40
32
200
LIMIT AND POSITION SENSOR
36
FERROMAGNETIC MATERIAL

FIG. 12

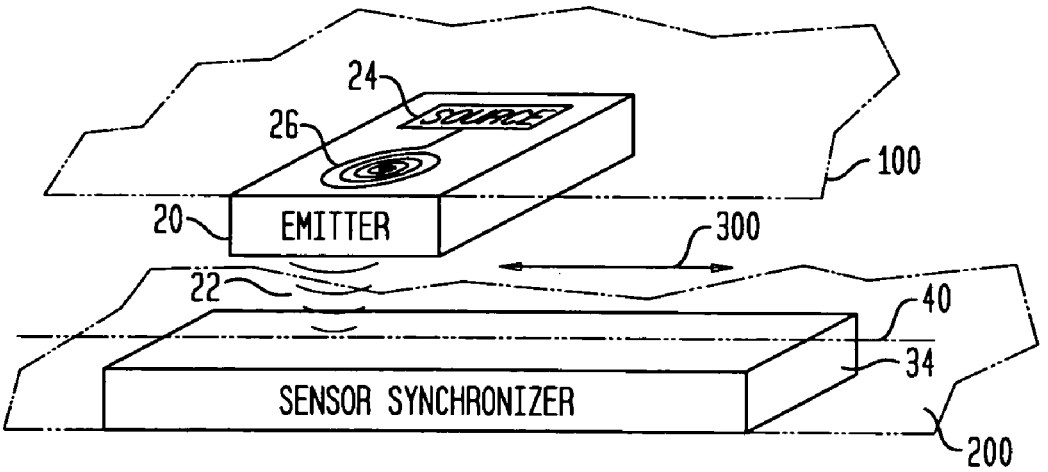
24
26
100
20
EMITTER
300
22
40
34
SENSOR SYNCHRONIZER
200

FIG. 13

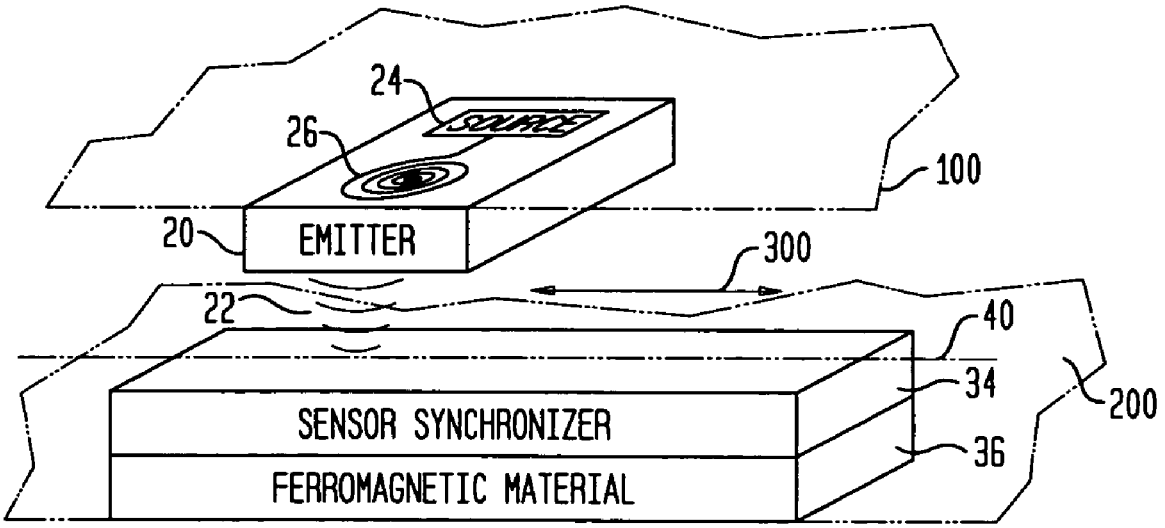
24
26
100
20
EMITTER
300
22
40
34
200
SENSOR SYNCHRONIZER
36
FERROMAGNETIC MATERIAL

SYSTEM PROVIDING LIMIT SWITCH FUNCTION WITH SIMULTANEOUS ABSOLUTE POSITION OUTPUT

ORIGIN OF THE INVENTION

The invention was made by employees of the United States Government and may be manufactured and used by or for the Government for governmental purposes without the payment of any royalties thereon or therefore.

BACKGROUND OF THE INVENTION

1. Field of the Invention

This invention relates to limit switches. More specifically, the invention is a system that can function as a limit switch and simultaneously provide a signal indicative of absolute position along a linear axis.

2. Description of the Related Art

In a wide variety of motorized systems, a system operation (e.g., stopping the system's motor) is triggered when a limit switch is tripped. Generally, a limit switch is configured to detect when a system's element has traveled/moved to a certain position. Since the system element is moving, inertia frequently causes the element to move past the limit switch thereby causing a condition known as "system overrun". When this occurs, the exact position of the element is unknown and techniques must be implemented to locate the element relative to the known limit switch position. Such techniques include use of separate position sensors or search routines. However, the use of separate position sensors adds size, weight and complexity to a system's limit switch function, while search routines cause time delays in system operations.

SUMMARY OF THE INVENTION

Accordingly, it is an object of the present invention to provide a limit and position sensing system.

Another object of the present invention is to provide a system that simultaneously generates both a limit switch type signal and a signal indicative of absolute position.

Other objects and advantages of the present invention will become more obvious hereinafter in the specification and drawings.

In accordance with the present invention, a limit and position sensing system includes a sensor assembly and an emitter. The sensor assembly includes first and second electrical conductors and ferromagnetic material. The first electrical conductor is arranged in a first plane, is coiled outwardly in a clockwise fashion starting at its first end to form a first coil region, and is coiled outwardly in a clockwise fashion starting at its second end to form a second coil region. Uniform spacing is defined between rings of the first and second coil regions along an axis of the first plane. The second electrical conductor is arranged in a second plane parallel to the first plane, and forms a single coil with rings thereof being uniformly-spaced. Portions of the rings of the single coil that lie between the first end and second end of the first electrical conductor are parallel to the first plane's axis. The ferromagnetic material is arranged in a third plane parallel to the first and second planes. The ferromagnetic material is aligned with the first coil region, second coil region, and single coil such that the ferromagnetic material spans beyond (a) the first and second ends of the first electrical conductor, and (b) the portions of the rings of the single coil that lie between the first end and second end of the first electrical conductor and are parallel to the first plane's axis. The emitter is spaced apart from the sensor assembly. The emitter transmits a periodic electromagnetic wave towards the sensor assembly such that the wave is incident on the first and second electrical conductors prior to being incident on the ferromagnetic material. The system's sensor assembly produces an output signal that varies depending on the location of the emitter along the axis of the first plane. The output signal can be used to provide a limit switch function and identify the position of the emitter along the axis of the first plane.

BRIEF DESCRIPTION OF THE DRAWING(S)

Other objects, features and advantages of the present invention will become apparent upon reference to the following description of the preferred embodiments and to the drawings, wherein corresponding reference characters indicate corresponding parts throughout the several views of the drawings and wherein:

FIG. **1** is a schematic view of a limit and position sensing system in accordance with an embodiment of the present invention;

FIG. **2** is a schematic view of the limit and position sensing system in accordance with another embodiment of the present invention;

FIG. **3** is a plan view of the limit and position sensor along with a plot of the sensor's output magnitude when the sensor is exposed to a periodic electromagnetic wave in accordance with the present invention;

FIG. **4** is a plan view of the synchronization coil used in the sensor assembly of the present invention;

FIG. **5** is an isolated plan view of the synchronization coil overlaid on an isolated plan view of the limit and position sensor;

FIG. **6** is a side schematic view of the limit and position sensing system illustrating the magnetic flux lines of the magnetic fields in the present invention;

FIG. **7** is an isolated plan view illustrating the possible positioning of the ferromagnetic material overlaid on isolated plan view of synchronization coil and the limit and position sensor;

FIG. **8** is a side schematic view of a multilayer construction of the sensor assembly in accordance with an embodiment of the present invention;

FIG. **9** is a schematic view of a limit and position sensing system in accordance with another embodiment of the present invention;

FIG. **10** is a schematic view of a limit and position sensing system in accordance with yet another embodiment of the present invention;

FIG. **11** is a schematic view of a limit and position sensing system in accordance with still another embodiment of the present invention;

FIG. **12** is a schematic view of a gap sensing system in accordance with another embodiment of the present invention; and

FIG. **13** is a schematic view of another embodiment of a gap sensing system.

DESCRIPTION OF THE PREFERRED EMBODIMENT(S)

Referring now to the drawings, and more particularly to FIG. **1**, a limit and position sensing system in accordance with an embodiment of the present invention is referenced generally by numeral **10**. System **10** provides an output

signal that can be used to trigger a limit switch function while simultaneously indicating absolute position. In general, system **10** has an emitter **20** coupled to a structure **100** and a sensor assembly **30** coupled to a structure **200**. Structures **100** and **200** are two spaced-apart structures and are shown in phantom to indicate that they do not comprise elements of system **10**. Structures **100** and **200** are capable of relative movement (e.g., only structure **100** moves, only structure **200** moves, or both structures **100** and **200** move) along a linear direction represented by two-headed arrow **300**.

As will be explained in greater detail below, sensor assembly **30** has an inherent sensing axis **40**. Sensor assembly **30** is positioned on structure **200** such that sensing axis **40** is parallel to linear direction **300**. Emitter **20** is positioned on structure **100** such that it is substantially aligned with sensing axis **40** as structures **100** and **200** experience relative movement along linear direction **300**. Emitter **20** and sensor assembly **30** are separated by a gap that remains substantially constant as structures **100** and **200** experience relative movement along linear direction **300**. Emitter **20** transmits a periodic wave **22** of electromagnetic energy towards sensor assembly **30** as structures **100** and **200** experience relative movement along linear direction **300**. The frequency and shape (e.g., sinusoidal, triangular, square, etc.) of periodic wave **22** are not limitations of the present invention.

Briefly, in operation, emitter **20** transmits periodic wave **22** towards sensor assembly **30** as structures **100** and **200** experience relative movement along linear direction **300**. Sensor assembly **30** produces a response (i.e., an electrical signal) in the presence of periodic wave **22** that can simultaneously indicate (i) when a particular relative reference position between structures **100** and **200** has been attained as a result of relative movement therebetween along linear direction **300** (i.e., a limit switch function), and (ii) the absolute position of emitter **20** relative to the reference position.

Emitter **20** can be any device capable of transmitting a period electromagnetic wave **22** therefrom. For example, emitter **20** could be realized by an excitation signal source **24** coupled to an excitation coil **26**. The excitation coil could be put on a printed wiring board (not shown) or similar configuration. Two excitation coils could be used to balance the signal, but are not necessary. The coil could be micromachined from a silicon die source for MEMS applications. Thus, it is to be understood that the present invention could be realized using a variety of other types of devices to generate/transmit periodic wave **22** without departing from the scope of the present invention as would be understood by one of ordinary skill in the art.

Sensor assembly **30** combines a number of unique innovations for its use in system **10**. In general, sensor assembly **30** includes

(i) a limit and position sensor **32** that generates the signal that can be interpreted by conventional electronics (not shown) to simultaneously provide a limit switch function and absolute position information,

(ii) a sensor synchronizer **34** that essentially transfers the phase information associated with periodic wave **22** to sensor assembly **30**, and

(iii) ferromagnetic material **36** that improves the electromagnetic sensitivity of sensor assembly **30** by collimating/focusing the electromagnetic field (associated with periodic wave **22**) incident on sensor **32**/coil **34** and providing a flux return path to emitter **20**. Note that the positions of sensor **32** and **34** relative to emitter **20** can be reversed (as shown in FIG. **2**) without departing from the scope of the present invention.

Limit and position sensor **32** is illustrated in greater detail in a plan view thereof in FIG. **3**. Typically, sensor **32** includes a non-electrically conductive planar substrate **32**A on which a electrical conductor **32**B is supported. For example, substrate **32**A can be a conventional printed wiring board substrate with electrical conductor **32**B being a conductive run "printed" thereon as would be well understood in the art. However, it is to be understood that the sensor **32** could be constructed in a variety of other ways (e.g., made on a silicon dye for MEMS applications) without departing from the scope of the present invention.

Regardless of the particular construction of sensor **32**, conductor **32**B is a single electrical conductor lying in a plane (e.g., the surface plane of substrate **32**A) with conductor **32**B terminating at ends **32**F and **32**G. Conductor **32**B is arranged to form two planar coil regions **32**C and **32**D. In coil region **32**C, conductor **32**B is coiled outwardly from end **32**F in a clockwise fashion. In coil region **32**D, conductor **32**B is coiled outwardly in a clockwise fashion from end **32**G. Coil regions **32**C and **32**D are electrically coupled to one another at an interior region **32**E of conductor **32**B. The above-described sensing axis **40** lies in the plane of conductor **32**B and extends through the central portions of coil regions **32**C and **32**D as illustrated. Along axis **40**, the spacing between adjacent runs of conductor **32**B (i.e., adjacent rings of the coils defined by coil regions **32**C/**32**D and interior region **32**E) is uniform. Although not a requirement of the present invention, the number of rings formed by conductor **32**B in coil region **32**C will typically match the number of rings formed by conductor **32**B in coil region **32**D.

When the above-described sensor **32** is exposed to a periodic electromagnetic wave (e.g., wave **22** from emitter **20**) from a position substantially aligned along axis **40** and spaced apart from sensor **32**, a voltage is induced in one of coil regions **32**C and **32**D depending on where the wave originates along axis **40**. As evidenced by the graph of output magnitude in FIG. **3**, the magnitude of the induced voltage indicates where the electromagnetic wave originated. For the illustrated example of coil regions **32**C and **32**D having an equal number of rings, if the electromagnetic wave originates at a positioned aligned with interior region **32**E, a zero output is produced when the output signal is tapped across ends **32**F and **32**G of conductor **32**B. Thus, in this example, interior region **32**E defines the null point of sensor **32**.

The sensor's output magnitude increases from the sensor's null point (e.g., at interior region **32**E) as the electromagnetic wave source moves along linear direction **300** towards either of the central portions of coil regions **32**C or **32**D with a peak magnitude at each coil region's central portion. Finally, the sensor's output magnitude in coil region **32**C decreases from the peak as the electromagnetic wave source moves further to the left and away from interior region **32**E, while the sensor's output magnitude in coil region **32**D decreases from the peak as the electromagnetic wave source moves further to the right and away from interior region **32**E.

As previously mentioned, coil regions **32**C and **32**D will typically have the same number of rings thereby yielding a zero or null point at the centrally positioned interior region **32**E. However, if one coil region has more rings than the other, the sensor's zero or null point will simply shift to the coil region with the greater number of rings.

The limit switch function capabilities of the present invention would be readily apparent to one of ordinary skill in the art after referring to FIG. **3**. Specifically, the graph in FIG. **3** illustrates that the null point of sensor **32** or any other set voltage level could be used to trigger one or more limit switch functions. For example, in the FIG. **3** embodiment, the peak voltages could be used to trigger the ends or limits of travel whereas the null point could be used to trigger when the midpoint of travel between ends **32**F and **32**G has been reached.

As is also clearly evident from the graph in FIG. **3**, the position information provided by the output magnitude is ambiguous as a magnitude value could be indicative of up to four different positions along axis **40**. The number of ambiguous magnitude values can be reduced to two if sensor **32** is configured such that relative movement between sensor **32** and emitter **20** (not shown in FIG. **3**) will only occur between the central portions of coil regions **32**C and **32**D (i.e., between the two peak output magnitudes). To eliminate the ambiguity, it is necessary to look at the phase of the voltage induced in one of coil regions **32**C and **32**D. That is, the output voltage of sensor **32** is in phase relative to the phase of the emitter's periodic electromagnetic wave (i.e., wave **22**) when the wave is positioned over one coil region, but is 180° out-of-phase relative to the phase of the emitter's periodic electromagnetic wave when the wave originates from a position over the other coil region. For example, if coil region **32**D produces an output voltage that is in phase relative to the emitter's excitation voltage of $A[\sin(\omega t)]$, the output voltage induced in coil region **32**D is of the form $K(x)*A[\sin(\omega t)]$ where $K(x)$ varies with the position x along axis **40**. In contrast, the output voltage induced in coil region **32**C will be 180° out-of-phase with the excitation voltage so that the output voltage induced in coil region **32**C (when emitter **20** is positioned thereover) is of the form $-K(x)*A[\sin(\omega t)]$.

Since the phase of the output voltage induced in sensor **32** is relative to the emitter's excitation voltage, the phase of such excitation voltage must also be known. This can be achieved by tapping into the emitter's inputs. However, the disadvantage of this is that emitter **20** and sensor assembly **30** essentially become mechanically limited. This may not be desirable in many moving structure applications. Accordingly, the present invention overcomes this problem through the use of sensor synchronizer **34**. By way of example, a plan view of sensor synchronizer **34** is shown in FIG. **4** where a non-electrically conductive planar substrate **34**A supports an electrical conductor **34**B. Similar to substrate **32**A/conductor **32**B, a variety of technologies can be utilized to construct substrate **34**A/conductor **34**B without departing from the scope of the present invention.

Regardless of the particular construction of sensor synchronizer **34**, conductor **34**B is a single electrical conductor lying in a plane (e.g., the surface plane of substrate **34**A). Conductor **34**B is arranged to form a single planar coil having multiple rings as shown. Sensor synchronizer **34** is aligned with sensor **32**. Specifically, the portions of the rings (formed by conductor **34**B) that span the useful sensitivity of sensor **32** (e.g., between the center portions of coil regions **32**C and **32**D as described above) are uniformly-spaced and parallel to one another. This situation is depicted in FIG. **5** where conductor **34**B is depicted as a dashed line overlaid on conductor **32**B.

In operation, as a periodic electromagnetic wave (e.g., wave **22**) is incident on conductor **34**B from a position along axis **40**, a voltage is induced in conductor **34**B with the induced voltage (e.g., measured at ends **34**C and **34**D) being in-phase with that of the emitter's periodic electromagnetic wave. In this way, sensor synchronizer **34** provides the comparative phase information necessary to resolve the previously-described position ambiguity generated by the output magnitude of sensor **32**. In other words, sensor synchronizer **34** transfers the phase of the emitter signal to the sensor side of system **10**.

In addition, the output signal generated by conductor **34**B is nearly constant for a particular fixed gap between emitter **20** and conductor **34**B, but changes for a different gap distance. Thus, the output signal produced by conductor **34**B can be used to measure the gap (between emitter **20** and conductor **34**B) and calibrate sensor assembly **30** for use in, for example, system **10**.

Referring additionally now to FIG. **6**, ferromagnetic material **36** operates to focus/collimate magnetic flux (represented by lines **50**) as the magnetic energy is incident on and passes through sensor **32**/synchronizer **34**. Note that either sensor **32** or synchronizer **34** could be positioned closer to emitter **20** as previously described. Ferromagnetic material **36** further serves as a flux return path that facilitates the wrapping of flux **50** back to emitter **20** to thereby complete the electromagnetic circuit.

Ferromagnetic material **36** should be aligned with those portions of conductors **32**B and **34**B that define the sensitive range of sensor assembly **30**. Typically, as illustrated in FIG. **7**, this means that ferromagnetic material **36** spans at least to the center portions of coil regions **32**C and **32**D as well as the portions of the rings of conductor **34**B that lie between the center portions of coil regions **32**C and **32**D. To avoid edge effects, it may be desirable to have ferromagnetic material **36** span beyond the usable sensitive area of sensor **32**/synchronizer **34**.

Ferromagnetic material **36** is any material capable of collimating/focusing magnetic flux and providing a flux return path. For example, material **36** could be a layer of mu-metal as it can transport a large amount of magnetic flux even in thin sheets thereof. However, other ferromagnetic materials could be used without departing from the scope of the present invention. Further, material **36** can be provided in the construction of sensor assembly **30**, or could be provided by virtue of the material surface of the structure to which sensor **32**/synchronizer **34** are attached (e.g., structure **200** in FIGS. **1** and **2**).

As has been mentioned throughout this description, sensor assembly **30** can be constructed in a variety of ways. For example, FIG. **8** illustrates a multilayer construction where an electrically non-conductive layer **60** separates conductors **32**B and **34**B, and an electrically non-conductive **62** separates conductor **34**B and ferromagnetic material **36**. Layer **60** could have opposing and parallel planar sides **60**A/**60**B with conductor **32**B "printed" on side **60**A and conductor **34**B "printed" on side **60**B. Coupling to the various ends of conductors **32**B and **34**B could be accomplished by a variety of techniques well understood in the art.

The advantages of the present invention are numerous. A single sensor provides a limit switch function and absolute position information from the same output. The system is simple and lends itself to miniaturization. The system is a non-contact system thereby greatly reducing the problems inherent in mechanically-based limit and position sensing systems.

The innovations provided by the present invention extend beyond the limit and position sensing system embodiment described herein. That is, some applications may not require all of the features of the above-described sensor assembly **30** as will now be explained briefly with the aid of FIGS. **9**–**13**.

For example, depending on application requirements, the sensor assembly used along with emitter **20** could utilize (i) just sensor **32** by itself (FIG. **9**), (ii) sensor **32** in conjunction with just sensor synchronizer **34** (FIG. **10**), or (iii) sensor **32** in conjunction with just ferromagnetic material **36** (FIG. **11**). Still further, the sensor assembly could be configured to simply measure the gap between emitter **20** and the sensor assembly. In such an application, the sensor assembly used along with emitter **20** could utilize (i) just synchronizer **34** by itself (FIG. **12**), or (ii) synchronizer **34** in conjunction with ferromagnetic material **36** (FIG. **13**).

Although the invention has been described relative to a specific embodiment thereof, there are numerous variations and modifications that will be readily apparent to those skilled in the art in light of the above teachings. It is therefore to be understood that, within the scope of the appended claims, the invention may be practiced other than as specifically described.

What is claimed as new and desired by Letters Patent of the United States is:

1. A limit and position sensing system, comprising:

a sensor assembly including

(i) a first electrical conductor arranged in a first plane and having first and second ends, said first electrical conductor coiled outwardly in a clockwise fashion starting at said first end to form a first coil region, said first electrical conductor coiled outwardly in a clockwise fashion starting at said second end to form a second coil region with uniform spacing being defined between rings of said first coil region and said second coil region along an axis of said first plane,

(ii) a second electrical conductor arranged in a second plane parallel to said first plane, said second electrical conductor forming a single coil with rings thereof being uniformly-spaced and with portions of said rings of said single coil that lie between said first end and said second end of said first electrical conductor being parallel to said axis, and

(iii) ferromagnetic material arranged in a third plane parallel to said first plane and said second plane, said ferromagnetic material aligned with said first coil region, said second coil region and said single coil such that said ferromagnetic material spans beyond (a) said first end and said second end of said first electrical conductor, and (b) said portions of said rings of said single coil; and

an emitter spaced apart from said sensor assembly for transmitting a periodic electromagnetic wave towards said sensor assembly to be incident on said first electrical conductor and said second electrical conductor prior to being incident on said ferromagnetic material.

2. A system as in claim **1** wherein said first plane is closer to said emitter than said second plane.

3. A system as in claim **1** wherein said second plane is closer to said emitter than said first plane.

4. A system as in claim **1** wherein said sensor assembly is adapted to be positioned on a first structure and said emitter is adapted to be positioned on a second structure with the first structure and the second structure being capable of relative movement therebetween in a linear direction, said sensor assembly adapted to be positioned on the first structure such that said axis of said first plane is parallel to the linear direction of relative movement.

5. A system as in claim **1** wherein the number of said rings of said first coil region is equal to the number of said rings of said second coil region.

6. A system as in claim **1** further comprising electrically non-conductive substrate means to which said first electrical conductor and said second electrical conductor are coupled.

7. A system as in claim **1** wherein said ferromagnetic material is mu-metal.

8. A limit and position sensing system, comprising:

a sensor assembly adapted to be coupled to a first structure, said sensor assembly including a first electrical conductor, a second electrical conductor, and ferromagnetic material arranged in electrically-isolated layers with

(i) said first electrical conductor arranged in a first plane and having first and second ends, said first electrical conductor coiled outwardly in a clockwise fashion starting at said first end to form a first coil region, said first electrical conductor coiled outwardly in a clockwise fashion starting at said second end to form a second coil region with uniform spacing being defined between rings of said first coil region and said second coil region along an axis of said first plane,

(ii) said second electrical conductor arranged in a second plane parallel to said first plane, said second electrical conductor forming a single coil with rings thereof being uniformly-spaced and with portions of said rings of said single coil that lie between said first end and said second end of said first electrical conductor being parallel to said axis, and

(iii) said ferromagnetic material arranged in a third plane parallel to said first plane and said second plane, said ferromagnetic material aligned with said first coil region, said second coil region and said single coil such that said ferromagnetic material spans beyond (a) said first end and said second end of said first electrical conductor, and (b) said portions of said rings of said single coil;

an emitter adapted to be coupled to a second structure, said emitter being spaced apart from said sensor assembly and substantially opposing said axis of said first plane, wherein said third plane of said sensor assembly is further from said emitter than said first and second planes of said sensor assembly, and wherein the first structure and the second structure are capable of relative movement therebetween along a linear direction, said emitter transmitting a periodic electromagnetic wave therefrom when activated; and

said sensor assembly adapted to be positioned on the first structure such that said axis of said first plane is parallel to the linear direction of relative movement.

9. A system as in claim **8** wherein said first plane is closer to said emitter than said second plane.

10. A system as in claim **8** wherein said second plane is closer to said emitter than said first plane.

11. A system as in claim **8** further comprising an electrically non-conductive substrate having opposing first and second planar sides, said first electrical conductor being coupled to said first planar side and said second electrical conductor being coupled to said second planar side.

12. A system as in claim **8** wherein said ferromagnetic material is a layer of mu-metal.

13. A limit and position sensing system, comprising:

a sensor assembly including

(i) an electrically non-conductive substrate having opposing first and second planar sides that are parallel to one another,

(ii) a first electrical conductor having first and second ends, said first electrical conductor coupled to said first planar side of said substrate, said first electrical con-

ductor coiled outwardly in a clockwise fashion starting at said first end to form a first coil region, said first electrical conductor coiled outwardly in a clockwise fashion starting at said second end to form a second coil region with uniform spacing being defined between rings of said first coil region and said second coil region along an axis that passes through center portions of said first coil region and said second coil region,

(iii) a second electrical conductor coupled to said second planar side of said substrate, said second electrical conductor forming a single coil with rings thereof being uniformly-spaced and with portions of said rings of said single coil that lie between said first end and said second end of said first electrical conductor being parallel to said axis, and

(iv) ferromagnetic material electrically-isolated from said first and second electrical conductors, said ferromagnetic material aligned with said first coil region, said second coil region and said single coil such that said ferromagnetic material spans beyond (a) said first end and said second end of said first electrical conductor, and (b) said portions of said rings of said single coil; and

an emitter spaced apart from said sensor assembly for transmitting a periodic electromagnetic wave towards said sensor assembly to be incident on said first electrical conductor and said second electrical conductor prior to being incident on said ferromagnetic material.

14. A system as in claim **13** wherein said first plane is closer to said emitter than said second plane.

15. A system as in claim **13** wherein said second plane is closer to said emitter than said first plane.

16. A system as in claim **13** wherein said sensor assembly is adapted to be positioned on a first structure and said emitter is adapted to be positioned on a second structure with the first structure and the second structure being capable of relative movement therebetween in a linear direction, said sensor assembly adapted to be positioned on the first structure such that said axis is parallel to the linear direction of relative movement.

17. A system as in claim **13** wherein the number of said rings of said first coil region is equal to the number of said rings of said second coil region.

18. A system as in claim **13** wherein said ferromagnetic material is mu-metal.

* * * * *