US006424470B1

(12) **United States Patent**
Lindner

(10) **Patent No.: US 6,424,470 B1**
(45) **Date of Patent: Jul. 23, 2002**

(54) **PANORAMIC REFRACTING OPTIC**

(75) Inventor: **Jeffrey L. Lindner**, Madison, AL (US)

(73) Assignee: **The United States of America as represented by the Administrator of the National Aeronautics and Space Administration**, Washington, DC (US)

(*) Notice: Subject to any disclaimer, the term of this patent is extended or adjusted under 35 U.S.C. 154(b) by 0 days.

(21) Appl. No.: **09/616,624**

(22) Filed: **Jul. 28, 2000**

(51) **Int. Cl.**[7] **G02B 13/06**; G02B 17/00
(52) **U.S. Cl.** **359/725**; 359/727
(58) **Field of Search** 359/725, 726–727, 359/364, 458, 402–403, 618; 348/36, 38–39

(56) **References Cited**

U.S. PATENT DOCUMENTS

5,473,474 A * 12/1995 Powell 359/725
6,115,193 A * 9/2000 Shu 359/725
6,175,454 B1 * 1/2001 Hoogland et al. 359/725

* cited by examiner

Primary Examiner—Jordan M. Schwartz
(74) *Attorney, Agent, or Firm*—James J. McGroary

(57) **ABSTRACT**

An optical device having a semi-spherical or hemispherical field-of-view is provided. A conically-shaped piece of optical material has an annular surface satisfying Snell's Law for total internal reflection with respect to light passing through the piece and incident on the annular surface from within the piece.

9 Claims, 3 Drawing Sheets

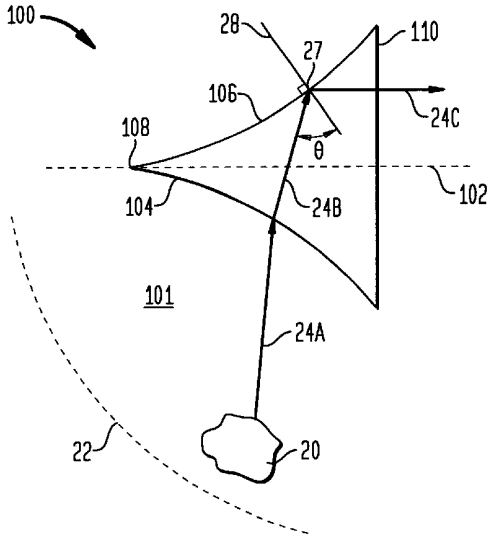

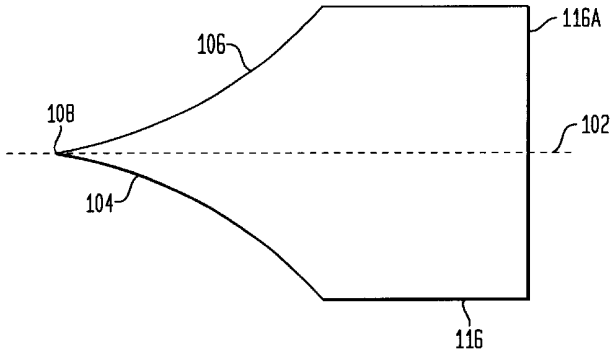

FIG. 1
(PRIOR ART)

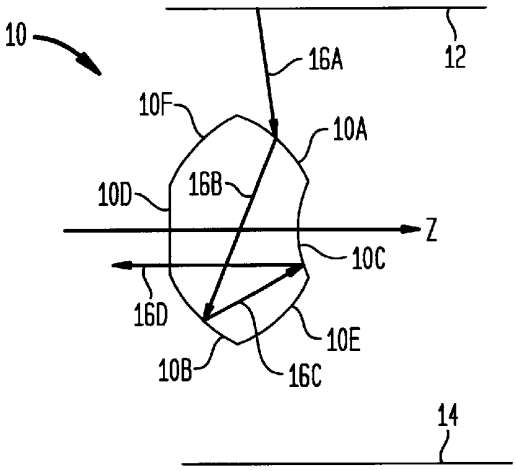

FIG. 2

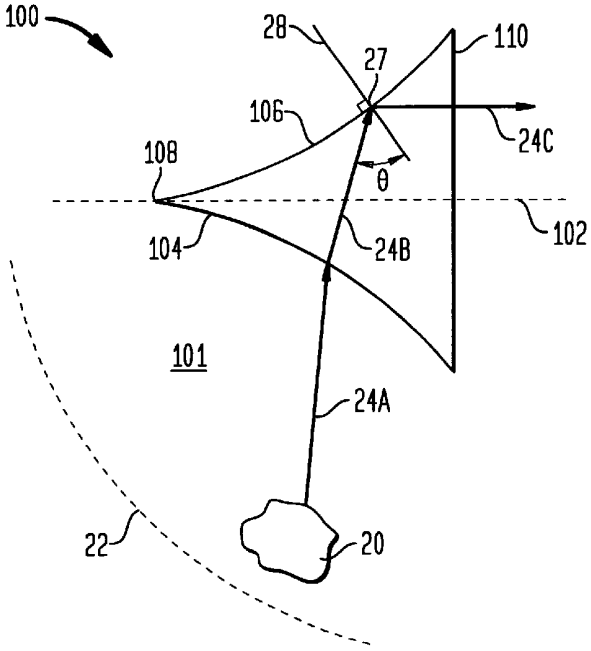

FIG. 3

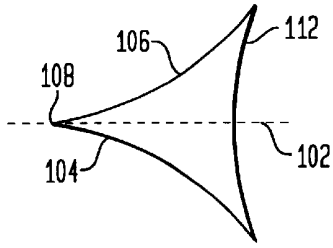

FIG. 4

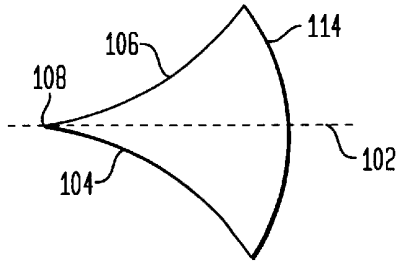

FIG. 5

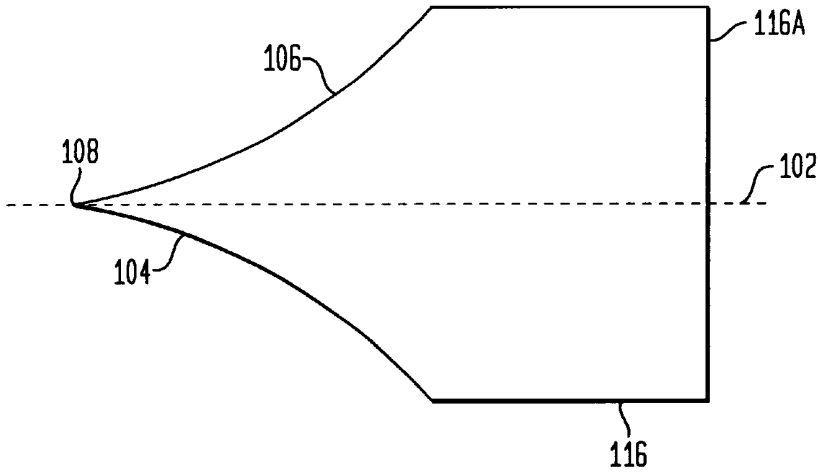

FIG. 6

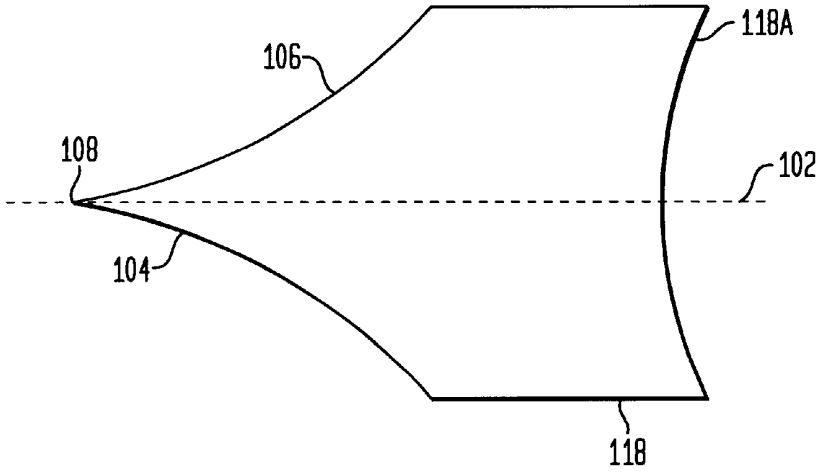

FIG. 7

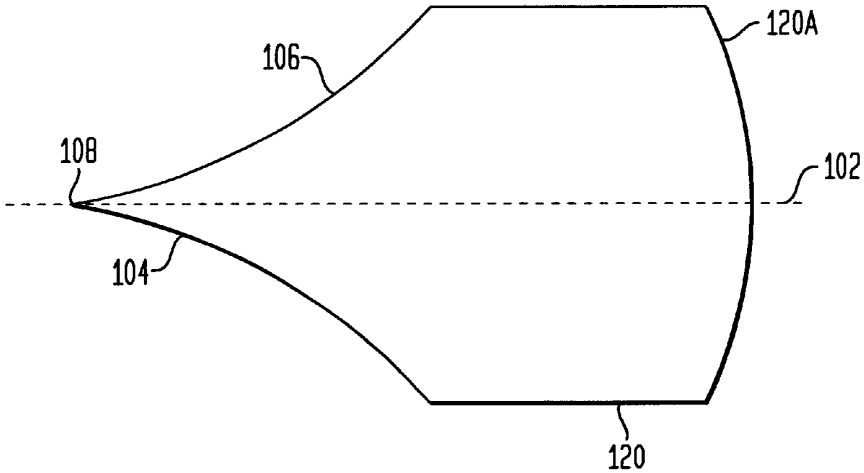

FIG. 8

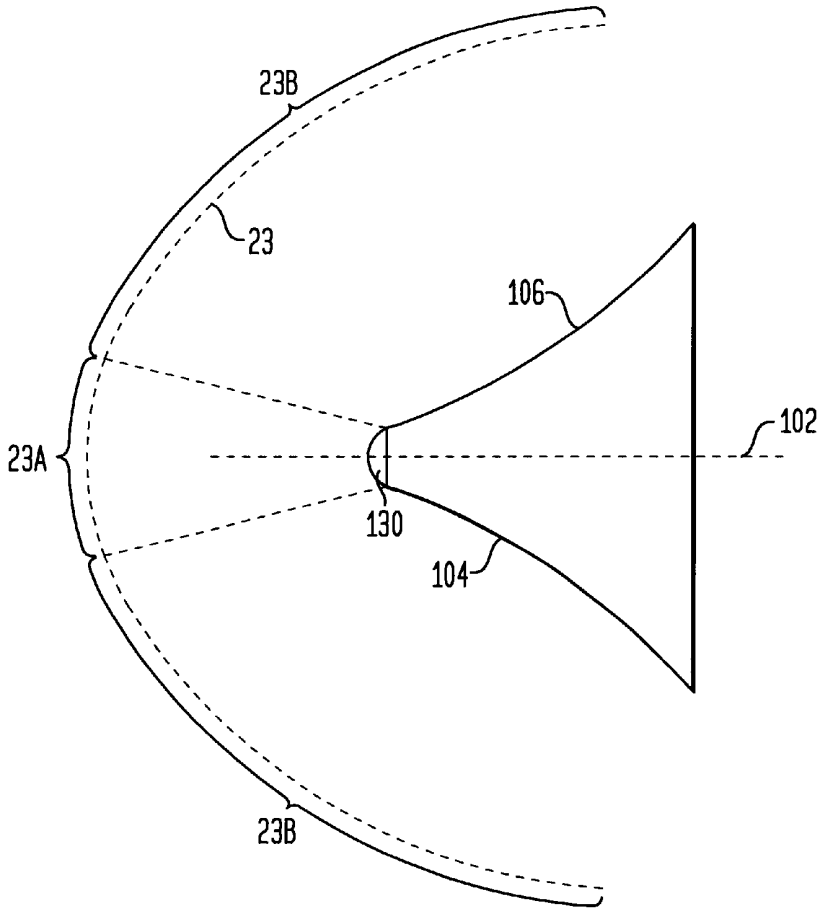

FIG. 9

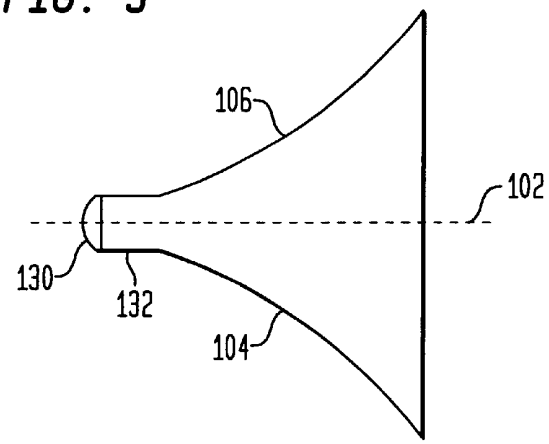

PANORAMIC REFRACTING OPTIC

ORIGIN OF THE INVENTION

The invention was made by an employee of the United States Government and may be manufactured and used by or for the Government for governmental purposes without the payment of any royalties.

BACKGROUND OF THE INVENTION

1. Field of the Invention

This invention relates to optical devices. More specifically, the invention is an optical device capable of achieving a semi-spherical or hemispherical field-of-view.

2. Description of the Related Art

Imaging or illuminating cylindrical, semi-spherical or hemispherical scenes is generally accomplished using a plurality of angular field-of-view cameras/lenses positioned to characterize the necessary field-of-view. Typically, the angular field-of-view of each camera/lens is on the order of 120° or less. Thus, multiple cameras/lenses are required to simultaneously view or illuminate, for example, the traffic flow at an intersection, the entire area surrounding a vehicle or structure, or the interior of a room or other structure.

A solution to this problem is a camera/lens having the ability to image or illuminate annularly thereabout, i.e., over an entire 360° field-of-view. One such device is a panoramic annular lens (PAL) available commercially from Optechnology Incorporated, Gurley, Ala. The PAL provides a cylindrical or flat annular image about an observation point. A two-dimensional diametrical view of the PAL is shown in FIG. **1** and is referenced generally by **10**. Accordingly, the three-dimensional solid structure of a PAL can be visualized by rotating PAL **10** about the Z-axis which passes through the central axis of PAL **10**.

The two-dimensional representation of the flat annular image plane of PAL **10** is represented by lines **12** and **14**. That is, PAL **10** can be used to image objects on either of lines **12** and **14**. For example, the image path for an object on line **12** is indicated by path lines **16**A–**16**D. Path **16**A indicates light traveling from line **12** (e.g., the surface of a cylindrical object) to a convex surface **10**A of PAL **10**. Path **16**B indicates refracted light traveling from convex surface **10**A through PAL **10** to a convex surface **10**B. Convex surface **10**B is internally reflective so that path **16**C indicates reflected light traveling from the reflective convex surface **10**B through PAL **10** to a reflective concave surface **10**C. Path **16**D indicates reflected light traveling from concave surface **10**C through PAL **10** to a flat clear surface **10**D, at which point light exits PAL **10**. Note that a similar set of path lines could be drawn for an object on line **14** with light entering PAL **10** at convex surface **10**E and being reflected at convex surface lOF.

Unfortunately, the three-dimensional realization of a lens based on the two-dimensional diametrical geometry of PAL **10** is difficult to machine with acceptable tolerances. Thus, the PAL based on the two-dimensional geometry described above is limited to use in expensive systems that can tolerate its high-cost of precision manufacturing. Further, the PAL's forward-looking angular resolution along the Z-axis is limited due to the presence of concave surface **10**C.

SUMMARY OF THE INVENTION

Accordingly, it is an object of the present invention to provide an optical device capable of being used to image or illuminate a 360° field-of-view.

Another object of the present invention is to provide an optical device having a field-of-view that is semi-spherical or hemispherical.

Still another object of the present invention is to provide a 360° field-of-view optical device of simple construction.

Other objects and advantages of the present invention will become more obvious hereinafter in the specification and drawings.

In accordance with the present invention, an optical device has at least a semi-spherical field-of-view. The device comprises a conically-shaped piece of optical material having an annular surface satisfying Snell's Law for total internal reflection with respect to light passing through the piece and incident on the annular surface from within the piece. The annular surface is symmetric about the device's longitudinal axis with its exterior being concave.

BRIEF DESCRIPTION OF THE DRAWING(S)

Other objects, features and advantages of the present invention will become apparent upon reference to the following description of the preferred embodiments and to the drawings, wherein corresponding reference characters indicate corresponding parts throughout the several views of the drawings and wherein:

FIG. **1** is a two-dimensional diametrical view of a prior art panoramic annular lens (PAL) illustrating the path of light movement therethrough;

FIG. **2** is a two-dimensional diametrical view of the panoramic refracting optic according to the present invention illustrating the path of light movement therethrough;

FIG. **3** illustrates another embodiment of the present invention having a concave end face;

FIG. **4** illustrates another embodiment of the present invention having a convex end face;

FIG. **5** illustrates another embodiment of the present invention having a cylindrical extension with a flat outboard end;

FIG. **6** illustrates another embodiment of the present invention having a cylindrical extension with a concave outboard end;

FIG. **7** illustrates another embodiment of the present invention having a cylindrical extension with a convex outboard end;

FIG. **8** illustrates another embodiment having of the present invention an aperture with a field-of-view along the optic's longitudinal axis; and

FIG. **9** illustrates still another embodiment of the present invention having an aperture with a field-of-view along the optic's longitudinal axis.

DESCRIPTION OF THE PREFERRED EMBODIMENT(S)

Referring again to the drawings, and more particularly to FIG. **2**, a two-dimensional diametrical view of an embodiment of a panoramic refracting optic according to the present invention is shown and referenced generally by numeral **100**. That is, the three-dimensional solid structure of the optic is achieved by rotating the view in FIG. **2** about the longitudinal axis **102** of optic **100**. Accordingly, the present invention is a solid, conically-shaped, three-dimensional structure. Optic **100** is made from any optical material that permits the passage of light therethrough. Suitable materials include, but are not limited to, quartz glass, plexiglass, flint glass, boron glass, diamond, or any other optical material suitable for use in the manufacturing of lenses.

In the description to follow, optic **100** will be explained for its use in imaging objects lying in a semi-spherical or hemispherical scene about optic **100**. However, it is to be understood that optic **100** could also be used to illuminate objects in this same scene simply by supplying light energy in the reverse direction of the imaging light paths. Accordingly, optic **100** can be used by itself or in conjunction with a camera or display device (not shown) for purpose of imaging, or could be used in conjunction with a light source (not shown) for purpose of illumination.

A conically-shaped annular portion of optic **100** is represented in FIG. **2** by concave surfaces **104** and **106** which meet at a vertex **108** and terminate at a flat face **110** opposite vertex **108**. While the shape of surfaces **104** and **106** are identical, the particular geometry thereof can vary. For example, surfaces **104** and **106** could be defined by the arc of a circle, a parabola, an ellipse, etc., as long as the following criteria are met. The criteria will be explained by describing the movement of light through optic **100**.

An object **20** to be imaged lies on a semi-spherical region defined by dashed line **22**. Light reflected by object **22** travels along path **24**A in a transmission medium **101** (e.g., air, water, etc.) and is incident upon the outer portion of surface **104**. The light refracts slightly and travels along path **24**B through optic **100** and is incident on the inner portion of surface **106** at a point of incidence **27** of light. A surface normal **28** is defined. Surfaces **104** and **106** are shaped such that light passing through optic **100** and incident on surface **104** or **106** (i.e., the conically-shaped annular portion of optic **100**) will be totally internally reflected. In the illustrated example, this means that light traveling along path **24**B is totally internally reflected at point **27** towards flat face **110** along path **24**C. Note that light along path **24**C is slightly refracted at as it exits flat face **110**. However, the amount of refraction is small because the surface normal and light path are nearly aligned. Therefore, the refraction at face **110** does not affect the function of optic **100**.

To achieve total internal reflection at the inner portion of surfaces **104** and **106**, Snell's Law for total internal reflection must be satisfied all along surfaces **104** and **106**. That is, the angle **0** between path **24**B at point of incidence **27** and surface normal **28** must be greater than the critical angle θ_c defined by Snell's Law which states

$$\sin \theta_c = (n_1/n_2) \tag{1}$$

where

n_1 is the index of refraction for transmission medium **101**, and

n_2 is the index of refraction of the material used for optic **100**.

Thus, for total internal reflection,

$$\theta > \theta_C \tag{2}$$

or

$$\theta > \sin^{-1}(n_1/n_2) \tag{3}$$

The present invention is not limited to the specific construction described for optic **100**. For example, the end face (i.e., face **110**) need not be flat, but could be a concave face **112** (FIG. **3**) or a convex face **114** (FIG. **4**). Shaping of the end face can be used to tailor the exiting (or entering in the case of illumination) light path for a particular application. Still further, the conically-shaped annular portion of the optic could have a cylindrically-shaped piece of optical material optically coupled thereto (i.e., integral therewith) as shown in FIGS. **5**, **6** and **7**. In FIG. **5**, a cylindrical portion **116** having an outboard end with a flat face **116**A extends from the conically-shaped annular portion defined by surfaces **104** and **106**. In FIG. **6**, a cylindrical portion **118** having an outboard end with a concave face **118**A extends from the conically-shaped annular portion defined by surfaces **104** and **106**. In FIG. **7**, a cylindrical portion **120** having an outboard end with a convex face **120**A extends from the conically-shaped annular portion defined by surfaces **104** and **106**. The inclusion of the cylindrical portion provides a means for holding the optic during the manufacturing and use thereof.

In each of the above-described embodiments, the optic's conically-shaped annular portion defined by surfaces **104** and **106** terminates in vertex **108**. However, in situations where a full hemispherical field-of-view is needed, an optical aperture defining a field-of-view along the optic's longitudinal axis can be incorporated into the optic of the present invention. For example, in FIG. **8**, a clear aperture or lens **130** is incorporated into the tip of the conically-shaped annular portion defined by surfaces **104** and **106**. Aperture **130** could also be incorporated on the end of a cylindrical extension **132** as shown in FIG. **9**. Aperture **130** has a field-of-view along longitudinal axis **102** so that a hemispherical region defined by dashed line **23** can be imaged or illuminated. More specifically, the field-of-view of the conically-shaped annular portion defined by surfaces **104** and **106** might be in the semi-spherical region **23**B. Note that any embodiment including aperture **130** can have a flat end face **110**, a concave face **112** as in FIG. **3**, a convex face **114** as in FIG.**4**, a cylindrical portion **116** as in FIG. **5**, a cylindrical portion **118** as in FIG. **6**, or a cylindrical portion **120** as in FIG. **7**.

The advantages of the present invention are numerous. The optic can image or illuminate a semi-spherical or hemispherical region thereabout. The conically-shaped optical can be constructed easily as it is a simple geometry to machine.

Although the invention has been described relative to a specific embodiment thereof, there are numerous variations and modifications that will be readily apparent to those skilled in the art in light of the above teachings. It is therefore to be understood that, within the scope of the appended claims, the invention may be practiced other than as specifically described.

What is claimed as new and desired to be secured by Letters Patent of the United States is:

1. An optical device having a 360° field-of-view, comprising:

a piece of optical material having a longitudinal axis, said piece defining an annular portion symmetric about said longitudinal axis, said annular portion defining an exterior surface that is concave wherein a first diameter of said piece is defined at one end of said annular portion and a second diameter of said piece is defined at an opposite end of said annular portion;

said first diameter being smaller than said second diameter;

said exterior surface shaped such that light passing through said piece and incident on said annular portion is totally reflected within said piece; and

a cylindrical piece of optical material optically coupled to said opposite end of said annular portion, said cylindrical piece extending from said opposite end in a direction along the optical axis that is away from said one end to an outboard end of said cylindrical piece.

2. An optical device as in claim **1** wherein said first diameter is zero.

3. An optical device as in claim **1** wherein said cylindrical piece defines a flat surface at said outboard end.

4. An optical device as in claim **1** wherein said cylindrical piece defines a concave surface at said outboard end.

5. An optical device as in claim **1** wherein said cylindrical piece defines a convex surface at said outboard end.

6. An optical device as in claim **1** further comprising a lens optically coupled to said one end of said annular portion, said lens having a field-of-view that is substantially along said longitudinal axis.

7. An optical device as in claim **6** wherein said cylindrical piece defines a flat surface at said outboard end.

8. An optical device as in claim **6** wherein said cylindrical piece defines a concave surface at said outboard end.

9. An optical device as in claim **6** wherein said cylindrical piece defines a convex surface at said outboard end.

* * * * *