US008294989B2

(12) **United States Patent**
Park et al.

(10) **Patent No.: US 8,294,989 B2**
(45) **Date of Patent: Oct. 23, 2012**

(54) **APPARATUS AND METHOD FOR CREATING A PHOTONIC DENSELY-ACCUMULATED RAY-POINT**

(75) Inventors: **Yeonjoon Park**, Yorktown, VA (US); **Sang H. Choi**, Poquoson, VA (US); **Glen C. King**, Williamsburg, VA (US); **James R. Elliott**, Versuvius, VA (US)

(73) Assignee: **The United States of America as represented by the Administrator of the National Aeronautics and Space Administration**, Washington, DC (US)

(*) Notice: Subject to any disclaimer, the term of this patent is extended or adjusted under 35 U.S.C. 154(b) by 634 days.

(21) Appl. No.: **12/512,344**

(22) Filed: **Jul. 30, 2009**

(65) **Prior Publication Data**

US 2011/0024609 A1 Feb. 3, 2011

(51) **Int. Cl.**
G02B 27/44 (2006.01)

(52) **U.S. Cl.** **359/565**

(58) **Field of Classification Search** 359/350, 359/354, 355, 359, 360, 565, 573, 721; 356/305, 356/328, 334, 451, 456; 250/550
See application file for complete search history.

(56) **References Cited**

U.S. PATENT DOCUMENTS

3,107,270	A	10/1963	Hildesbrand	
4,752,130	A	6/1988	George et al.	
4,995,714	A	2/1991	Cohen	
6,518,555	B1	2/2003	Kikuchi et al.	
6,762,839	B2	7/2004	Zeylikovich et al.	
6,999,165	B2	2/2006	Hagler	
7,072,442	B1	7/2006	Janik	
7,158,228	B2	1/2007	Psaltis et al.	
7,196,791	B2	3/2007	Johansen et al.	
8,018,815	B2	9/2011	Choi et al.	
2001/0046276	A1	11/2001	Schneider et al.	
2007/0109924	A1	5/2007	Takahashi et al.	
2007/0139777	A1 *	6/2007	Williams et al.	359/565
2007/0164842	A1	7/2007	Koenig	
2009/0231677	A1	9/2009	Park et al.	
2009/0261250	A1 *	10/2009	Zhou et al.	250/307

OTHER PUBLICATIONS

Fu et al., Plasmonic microzone plate: Superfocusing at visible regime, Applied Physics Letters 91, 061124 (2007).*
Raymond A. Serway, Physics for Scientists & Engineers, 4th Ed., vol. 2 (1996), p. 1065.*

(Continued)

Primary Examiner — Stephone Allen
Assistant Examiner — Kimberly N Kakalec
(74) *Attorney, Agent, or Firm* — Andrea Z. Warmbier; Linda B. Blackburn

(57) **ABSTRACT**

An optical apparatus includes an optical diffraction device configured for diffracting a predetermined wavelength of incident light onto adjacent optical focal points, and a photon detector for detecting a spectral characteristic of the predetermined wavelength. One of the optical focal points is a constructive interference point and the other optical focal point is a destructive interference point. The diffraction device, which may be a micro-zone plate (MZP) of micro-ring gratings or an optical lens, generates a constructive ray point using phase-contrasting of the destructive interference point. The ray point is located between adjacent optical focal points. A method of generating a densely-accumulated ray point includes directing incident light onto the optical diffraction device, diffracting the selected wavelength onto the constructive interference focal point and the destructive interference focal point, and generating the densely-accumulated ray point in a narrow region.

19 Claims, 5 Drawing Sheets

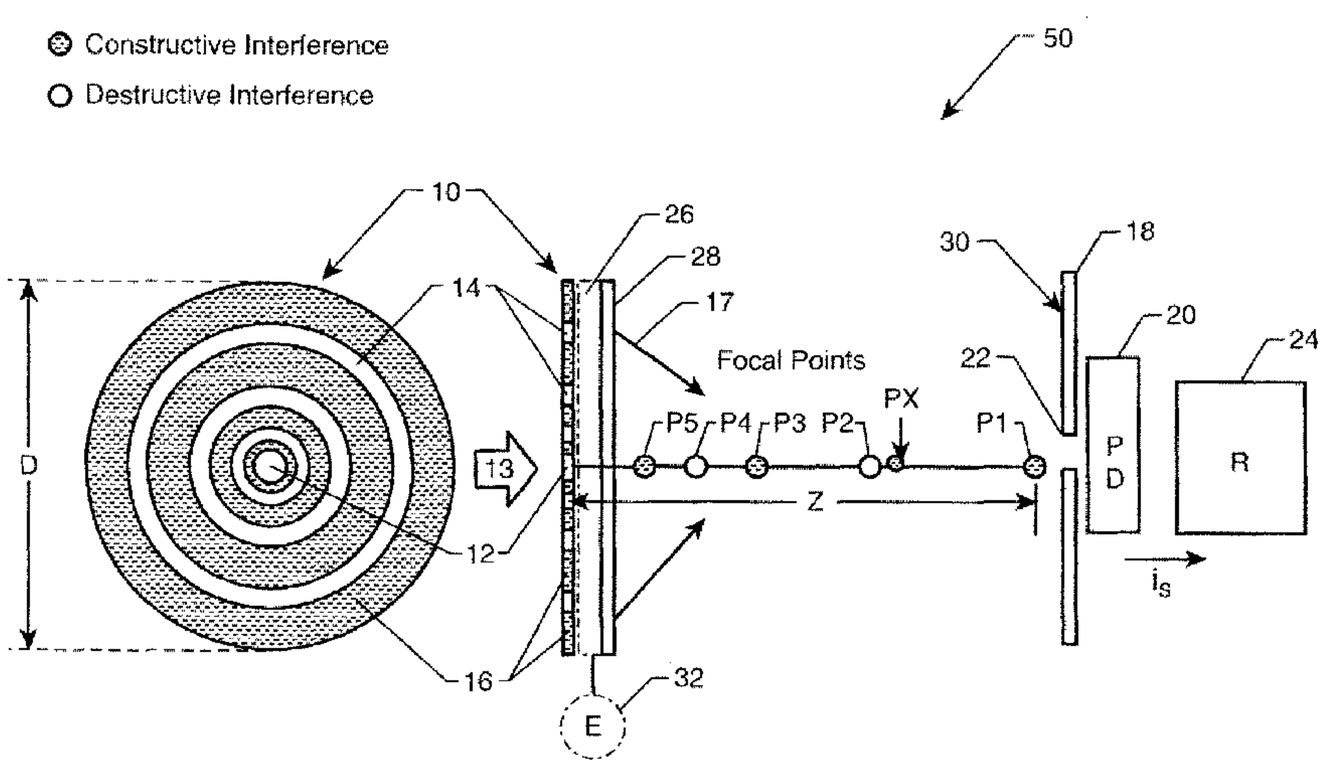

OTHER PUBLICATIONS

Surface plasmon polaritons, (Wikipedia), [online], [retrieved on Apr. 3, 2012] Retrieved from the Internet: <URL: http://en.wikipedia.org/wiki/Surface_plasmon_polaritons>.*

D. Gill et al., Lithographic patterning and confocal imaging with zone plates, J. Vac. Sci. Technol. B, 2000, p. 2881-2898, vol. 18(6).

Ihsan J. Djomehri et al., Zone-plate-array lithography in the deep ultraviolet, J. Vac. Sci. Technol. B, 1998, p. 3426-3429, vol. 16.

Rajesh Menon et al., Alpha-prototype system for zone-plate-array lithography, J. Vac. Sci. Technol. B, 2004, p. 3032-3037, vol. 22.

* cited by examiner

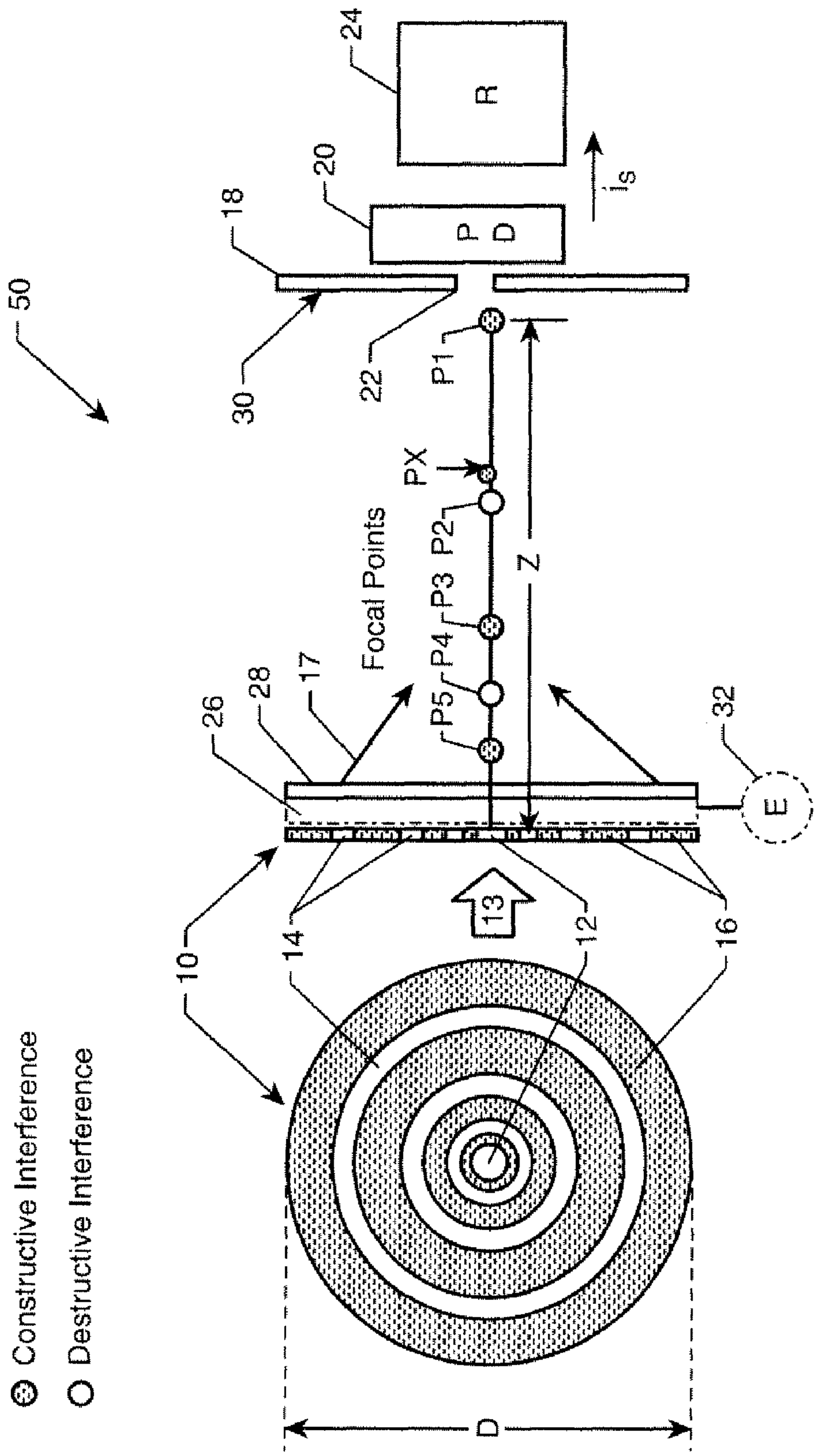
Constructive Interference
Destructive Interference
50
10
30
18
20
24
R
P D
i_s
22
P1
PX
P2
P3
P4
P5
Focal Points
Z
26
28
17
4
13
12
16
32
E
D

Fig. 1

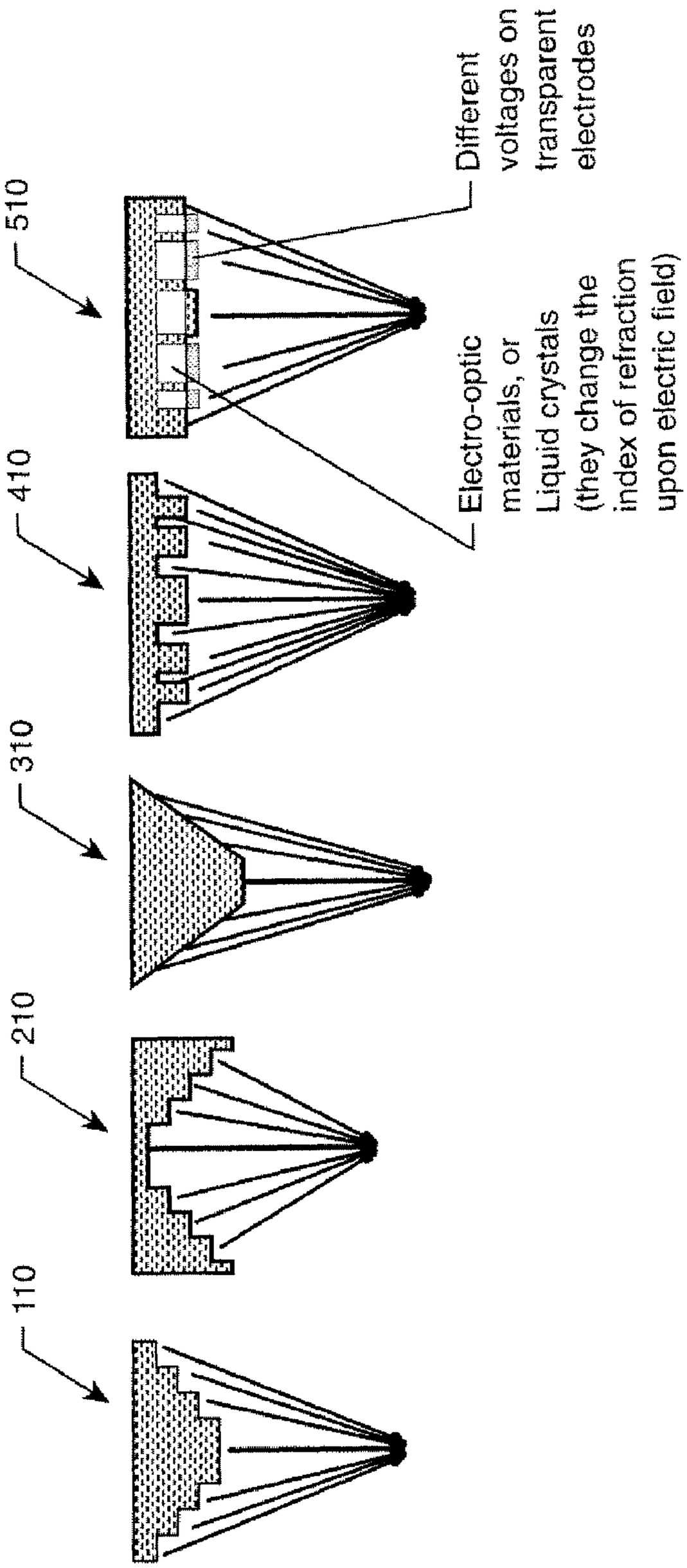
510
410
310
210
110
Different voltages on transparent electrodes
Electro-optic materials, or Liquid crystals (they change the index of refraction upon electric field)

Fig. 2

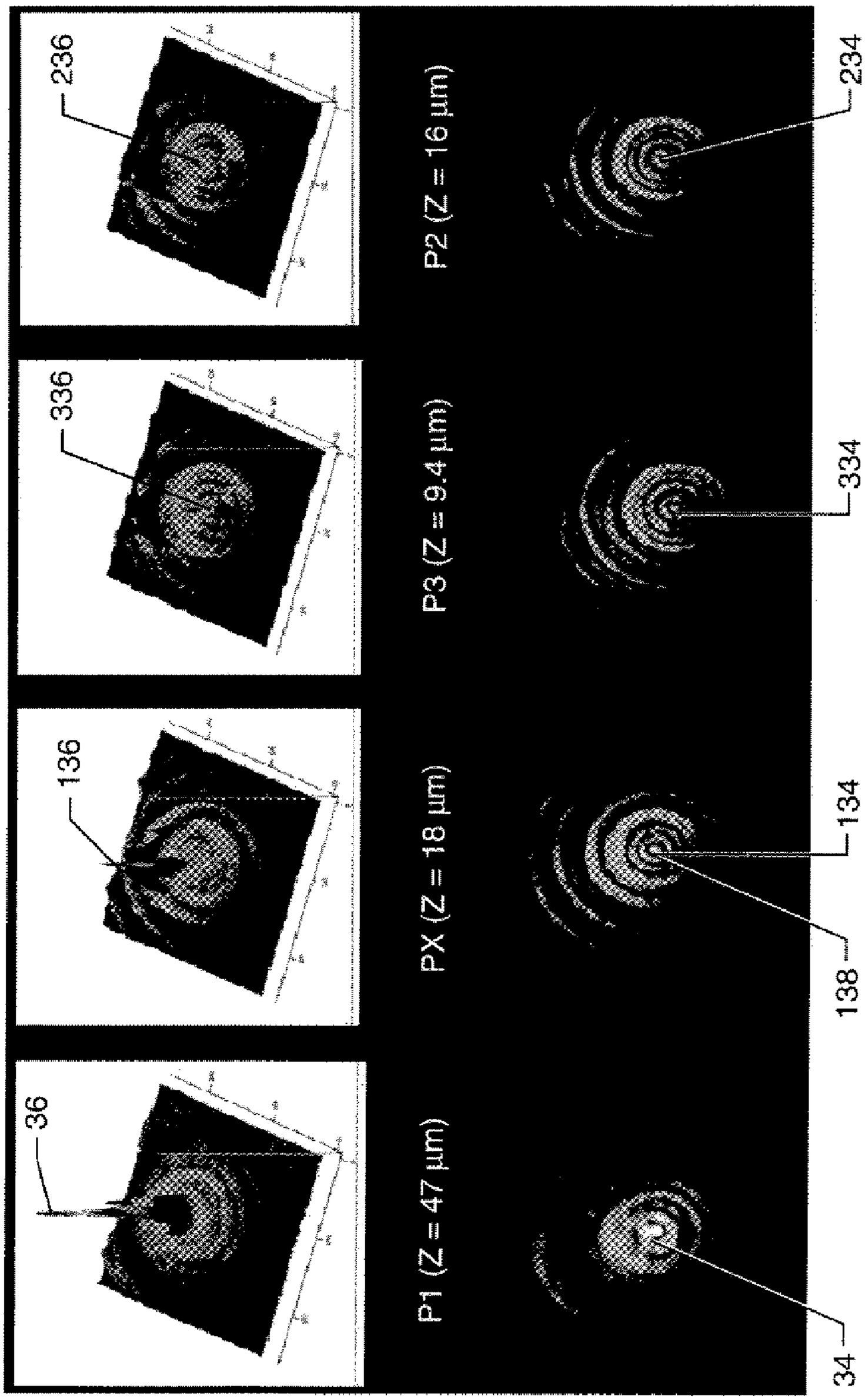
236
336
136
36
P2 (Z = 16 µm)
P3 (Z = 9.4 µm)
PX (Z = 18 µm)
P1 (Z = 47 µm)
234
334
134
138
34

Fig. 3

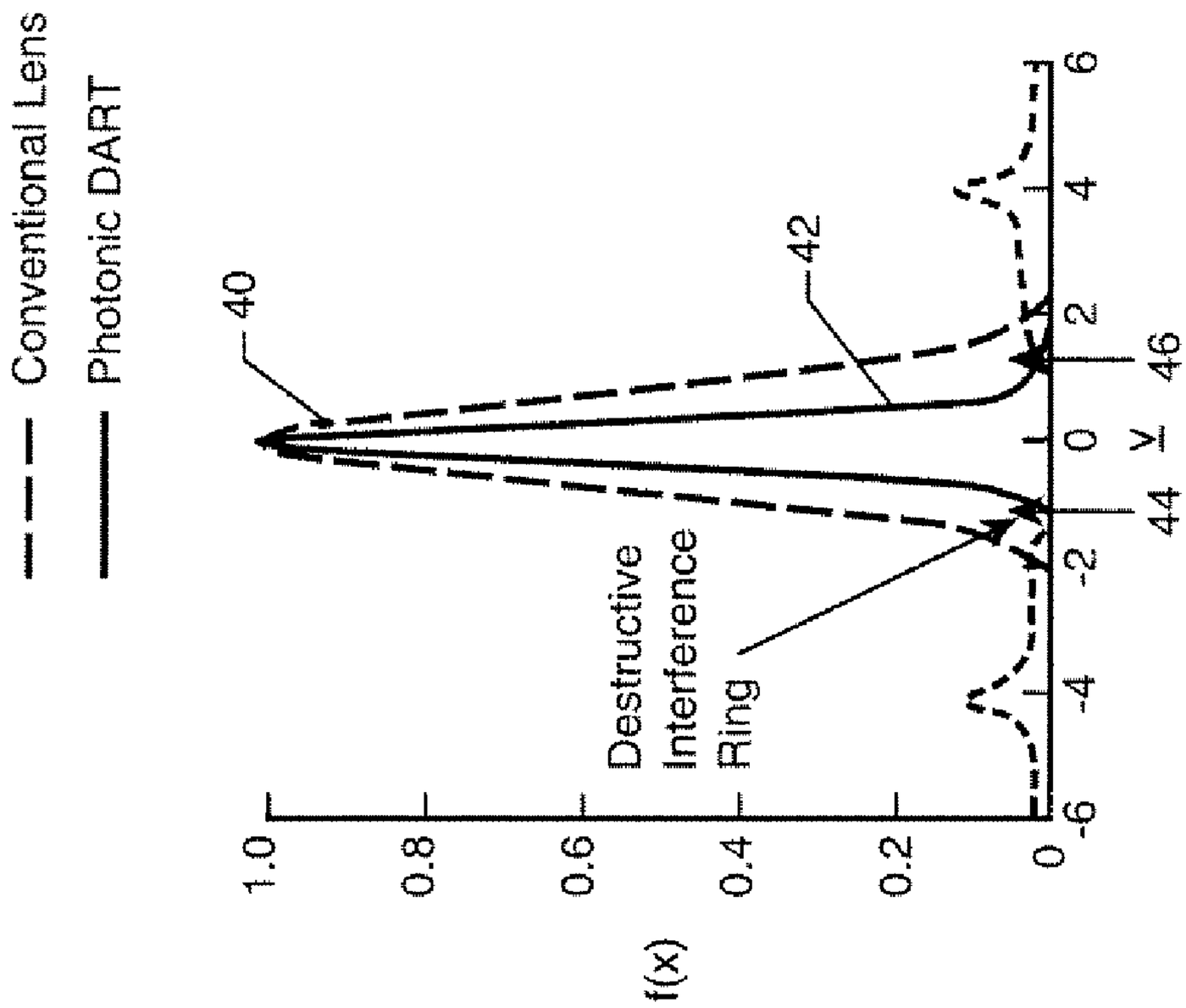
Conventional Lens
Photonic DART
40
42
Destructive Interference Ring
f(x)
1.0
0.8
0.6
0.4
0.2
0
-6
-4
-2
0
2
4
6
44
46
V

Fig. 4B

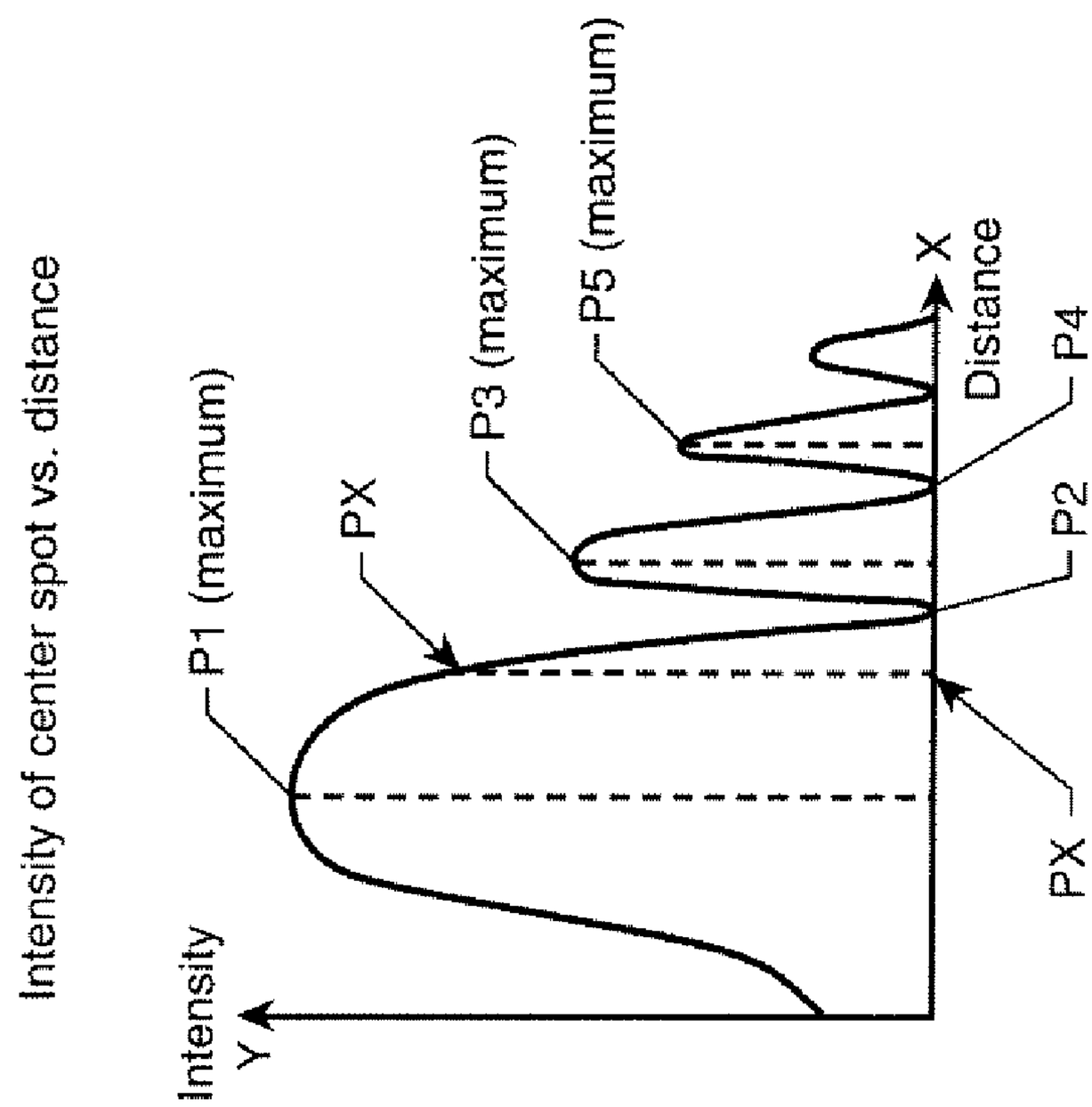
Intensity of center spot vs. distance
Intensity
Y
P1 (maximum)
PX
P3 (maximum)
P5 (maximum)
X
Distance
P4
P2
PX

Fig. 4A

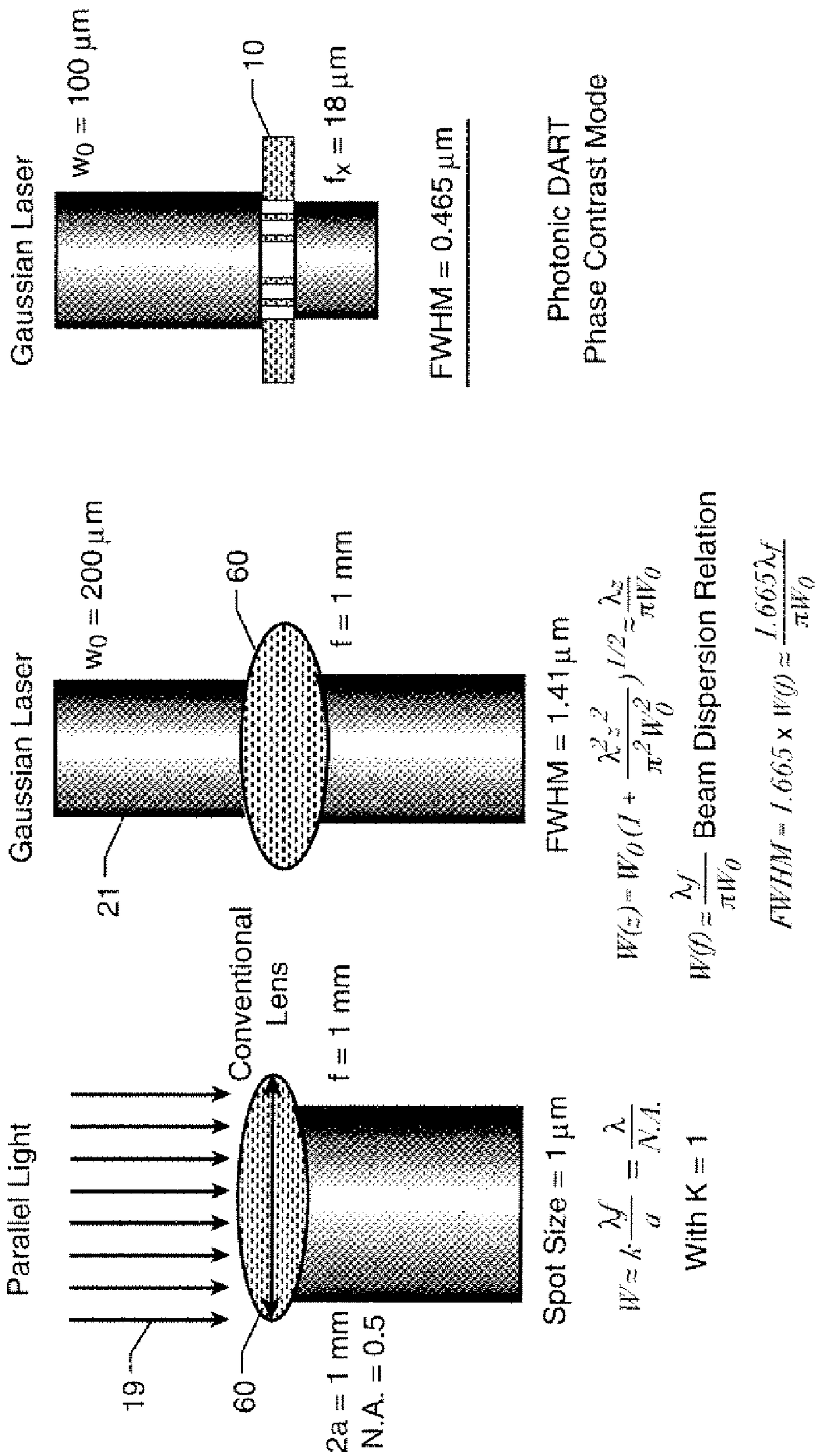
Gaussian Laser
w_0 = 100 µm
10
f_x = 18 µm
FWHM = 0.465 µm
Photonic DART
Phase Contrast Mode
Gaussian Laser
w_0 = 200 µm
60
f = 1 mm
21
FWHM = 1.41 µm
$W(z) = W_0(1 + \frac{\lambda^2 z^2}{\pi^2 W_0^2})^{1/2} \approx \frac{\lambda z}{\pi W_0}$
$W(f) \approx \frac{\lambda f}{\pi W_0}$ Beam Dispersion Relation
$FWHM = 1.665 \times W(f) \approx \frac{1.665 \lambda f}{\pi W_0}$
Parallel Light
Conventional Lens
f = 1 mm
19
60
2a = 1 mm
N.A. = 0.5
Spot Size = 1 µm
$W \approx k \frac{\lambda f}{a} = \frac{\lambda}{N.A.}$
With K = 1

Fig. 5

APPARATUS AND METHOD FOR CREATING A PHOTONIC DENSELY-ACCUMULATED RAY-POINT

The invention described herein was made by employees of the United States Government and may be manufactured and used by or for the Government for governmental purposes without payment of any royalties thereon or therefor.

TECHNICAL FIELD

The present invention relates generally to an optical method and apparatus for generating a highly-focused or densely-accumulated ray point of incident light surrounded by destructive interference rings.

BACKGROUND OF THE INVENTION

The process of lithography involves the transfer of a pattern to photosensitive material using light or another suitable radiation source. That is, when photosensitive material is exposed to radiation while regions of the material are masked, the radiation pattern is transferred to the exposed or unmasked material due to the difference in the properties of the exposed and unexposed regions. In this manner various lithographic products may be produced. Certain laser lithography or photolithography processes use a laser beam having a narrow beam width as the radiation in order to imprint precise patterns onto a substrate.

Focusing a laser beam using conventional optical lenses may be limited by the achievable beam-waist of a Gaussian photon profile. That is, one must decrease the focal distance of a conventional optical lens in order to achieve a finely-focused diameter. Focusing light into a beam having a diameter less than the wavelength of the photons may be extraordinarily difficult to achieve. Phase-contrast (PC) lithography processes that use PC masking techniques may enhance the available optical resolution. However, PC masking is known to be relatively expensive, with a different PC mask typically being fabricated for each required lithography pattern.

SUMMARY OF THE INVENTION

Accordingly, a photonic densely-accumulated ray-point (DART) method and apparatus are provided herein for generating a strong constructive spot or ray point using a phase-contrast mechanism of the destructive rings of a destructive focal point. A single, finely-focused non-conventional optical point is created by destructive interference between adjacent conventional focal points. Such a point may enable ultra-high resolution optical lithography without the need for phase-contrast (PC) masking of the type explained above.

Using the DART method, photons of incident light may be focused into an ultra-narrow region below the wavelength of the photons using a suitable diffraction device, e.g., a conventional micro-ring grating (μRG) assembly, an electro-optical μRG assembly, optical lenses, or another suitable optical device generating the required phase-contrast effect. For example, a ray point having a full-width-half-maximum (FWHM) value of 465 nm may be used with a laser beam having a diameter of 532 nm, thus enabling power densities on the order of at least a few MW/cm^2 at the focused ray point. Such extremely high-power densities may be harnessed for various useful optical system designs.

In particular, an optical apparatus includes an optical diffraction device configured for diffracting a predetermined wavelength of incident light onto adjacent optical focal points, wherein one of the optical focal points is a constructive interference point and the other optical focal point is a destructive interference point. The apparatus may include a photon detector operable for detecting a spectral characteristic of the predetermined wavelength. The diffraction device is adapted for generating a constructive ray point using phase-contrasting of the destructive interference point, with the ray point being located between the adjacent optical focal points.

The optical diffraction device may include coaxially-aligned micro-ring gratings, and may include an electro-optical layer positioned adjacently thereto. The phase-contrasting effect may be achieved at least in part by selectively applying a voltage to the electro-optical layer. Alternately, the optical diffraction device may include a concave lens or a convex lens.

A method of generating a densely-accumulated ray point using an optical diffraction device includes directing incident light onto the optical diffraction device, with the optical diffraction device configured for diffracting a selected wavelength of the incident light onto a constructive interference focal point and a destructive interference focal point. The destructive interference focal point has a series of concentric destructive rings. The method also includes diffracting the selected wavelength onto the constructive interference focal point and the destructive interference focal point using the optical diffraction device, and phase-contrasting the concentric destructive rings using the MZP to thereby generate the ray point. The method may include detecting spectral characteristics of the selected wavelength using a photon detector or other suitable device. The method may also include using the ray point for sub-wavelength optical lithography, nanofabrication, or optical manipulation of molecules.

The above features and advantages and other features and advantages of the present invention are readily apparent from the following detailed description of the best modes for carrying out the invention when taken in connection with the accompanying drawings.

BRIEF DESCRIPTION OF THE DRAWINGS

FIG. **1** is a schematic illustration of a micro-zone plate (MZP) system configured for generating a non-conventional densely-accumulated ray point in accordance with one embodiment of the present invention;

FIG. **2** is schematic illustration of an alternative set of optical devices each being suitable for generating the densely-accumulated ray point shown in FIG. **1**;

FIG. **3** is a schematic illustration of a series of photon measurement profiles describing certain attributes of the conventional focal points and the ray point shown in FIG. **1**;

FIG. **4**A is a graph of intensity versus distance of the photon measurements shown in FIG. **3**;

FIG. **4**B is a graph showing a destructive interference ring forming the densely-accumulated ray point shown in FIG. **1**; and

FIG. **5** is a schematic illustration of a conventional lens with parallel light, a Gaussian laser dispersion, and a phase-contrast mode using the method and apparatus of the present invention.

DESCRIPTION OF THE PREFERRED EMBODIMENTS

Referring to the drawings wherein like reference numbers represent like components throughout the several figures, and beginning with FIG. **1**, a micro-zone plate (MZP) **10** is shown in both front and side-view that may be used to generate a

non-conventional densely-accumulated ray point (PX) between successive conventional focal points. The ray point (PX) is focused using phase contrasting, as will be explained below. Within the scope of the present invention, the term "MZP" refers to a plate or film of alternating transparent and opaque concentric rings of a predetermined or calibrated width. The MZP **10** may be constructed on a thin film or layer of glass or other suitable material, as is understood in the art. The MZP **10** can acquire photons of a particular wavelength from multiple point light sources or micro/nano objects, and can focus the photons at the ray point (PX) within an ultra-narrow region below the wavelength of the photons, e.g., a 532 nm laser beam.

The MZP **10** includes a transparent center disk **12** that is circumscribed by a series of progressively larger transparent rings **14**. The transparent rings **14** are separated by an interposed series of progressively larger opaque rings **16**, with the center disk **12** and each of the rings being coaxially-aligned and centered on a common optical axis **11**. For simplicity, the number of rings **14**, **16** is kept at a minimum in FIG. **1**, with the actual number of rings depending on the particular design and intended use of the MZP **10**.

The transparent center disk **12** and the various rings **14**, **16** may be configured as optical gratings on a thin film of glass or other suitable material. As will be understood by those of ordinary skill in the art, the term "optical gratings" refers to an optical element configured for diffracting incident light and directing it to a predetermined optical focal point. Gratings have a regular pattern which split and diffract incident light into several beams travelling in directions that depend on the spacing between gratings and the wavelength of the incident light.

Still referring to FIG. **1**, source light (arrows **13**) is directed toward the MZP **10** from a light source, e.g., a micro/nano object, organism, matter, or other substance serving as the subject of the spectral analysis at hand. The source light is then diffracted by the various rings **14**, **16** of the MZP **10** into different wavelengths, with each wavelength directed toward a conventional constructive or destructive optical focal point P**1**, P**2**, P**3**, P**4**, or P**5**. That is, the focal point corresponds to particular wavelengths or frequencies of the source light (arrows **13**). The transparent center disk **12** allows a constructive interference point at the farthest focal point, i.e., the focal point P**1**. Additional constructive interference points are provided at focal points P**3** and P**5**.

As is well understood in the art, the transmission of light in the form of waves gives rise to the principals of constructive and destructive wave interference. During any wave interference the shape of the medium is determined by the sum of the separate amplitudes of each wave. The waves interfere when one wave passes through another. When the crest of one wave is superpositioned upon the crest of another, the waves constructively interfere. Constructive interference also occurs when the trough of one wave is superpositioned upon the trough of another. Conversely, destructive interference occurs when the crest of one wave is superpositioned upon the trough of another. During destructive interference, the positive amplitudes from one crest are added to the negative amplitudes from the other trough, with the result being a reduced amplitude or destructive wave interference. Such principles give rise to the different constructive/destructive focal points discussed above.

The ray point PX provides a strong intermediate constructive spot, which is surrounded by destructive rings (see FIG. **4**B) at a point between conventional focal points P**1** and P**2**, and closely adjacent to the destructive interference focal point P**2**. The MZP **10** has a diameter on the micro-scale. In one embodiment the diameter (D) is approximately 20 micrometers or microns (μ) to approximately 30μ, while in another embodiment the diameter (D) is approximately 22μ with a transparent center disk **12** of approximately 7μ. However, other diameters of the MZP **10** and its center disk **12** may be used without departing from the intended scope of the invention. In the embodiment wherein the diameter (D) is approximately 22μ and the center disk **12** is approximately 7μ, the focal length (Z) between the conventional focal points P**1**-P**5** and the MZP **10** may be theoretically calculated as: 46.99μ, 15.66μ, 9.40μ, 6.71μ, and 5.22μ, respectively.

Still referring to FIG. **1**, a densely-accumulated ray point (DART) apparatus **50** may include the MZP **10**, a light-blocking aperture device **18**, and a photon detector (D) **20**. The aperture device **18** defines an opening or aperture **22**, which may be circular according to one embodiment, and which may be moved as needed to circumscribe a desired conventional focal point P**1**-P**5** or the ray point PX. The DART apparatus **50** may be placed in communication with a data recorder **24**, which may be any device configured for recording the desired spectral information (arrow i_s) detected, measured, or otherwise determined by the photon detector **20**.

A light source (not shown) may be a naturally-existing light emitter, fluorescence, or emission spectra from excited molecules of target materials by an accompanying light-emitting diode (LED) or diode laser. The light source generate, emits, or radiates source radiation or source light (arrows **13**), which is transmitted to the MZP **10**. The source light (arrows **13**) is differentiated by diffraction through the micro-ring pattern of the annular gratings or rings **14**, **16** of the MZP **10**, and optionally through an electro-optical (E/O) layer **26** positioned adjacent thereto, with diffracted light (arrows **17**) passing from the micro-ring gratings of the MZP **10** through a transparent electrode layer **28** and to the aperture device **18**.

The diffracted light (arrows **17**) of a predetermined wavelength(s) is allowed to enter the aperture **22**, while non-selected wavelength(s) are reflected away by a light-blocking surface **30**. The electrode layer **28** may be constructed of indium Tin Oxide (ITO) or another suitable material providing a bias voltage for the E/O layer **26**. The E/O layer **26** in turn may be constructed of a material having a refractive index that is varied by application of an electrical field, e.g., liquid crystal, non-linear optical crystal, or electro-optical polymer to name just a few. An energy source (E) **32** may be selectively connected to the E/O layer **26** and/or to the MZP **10** to generate the required electrical field in this particular embodiment.

Referring to FIG. **2**, the ray point PX may be alternately achieved with optical lenses or devices other than the MZP **10** shown in FIG. **1** and described above. For example, phase-contrast around the central spot may be achieved using optical devices **110**, **210**, **310**, **410**, and **510**. Optical devices **10** and **310** may be configured as a convex lens or prism, while optical device **210** may be a concave lens or prism. Optical device **410** may be configured as a conventional μRG device, e.g., the MZP **10** of FIG. **1**, while optical device **510** may be configured as an electro-optical μRG device having an electrically-variable index of refraction, e.g., the E/O variant shown in phantom in FIG. **1** and discussed above. However configured, each of the optical devices **110**-**510** utilize phase contrasting to enhance and focus the center beam **34** generating the ray point PX, as will now be discussed in detail with reference to FIG. **3**.

Referring to FIG. **3**, measured photon distribution of a 532 nm laser is shown for focal point P**1** at Z=47μ, the ray point PX at Z=18μ, and for focal points P**2** at Z=16μ and P**3** at Z=9.4μ. Focal point P**1** has the highest intensity of photons,

with a brightly-focused point at its center **34**. However, the distribution **36** of photons at the center **34** of focal point P**1** is relatively low compared to the distribution **136** of photons at ray point PX. Note that the center **134** of ray point PX has a smaller diameter than that of the center **34** of focal point P**1**. Also, the center **234** of focal point P**2** is almost devoid of photons, as shown by photon distribution **236**. As observed herein, this effect is created by the collapsing of the destructive rings surrounding the bright center **134** at focal point PX. Also shown in FIG. **3** is focal point P**3**, which is a constructive spot with a relatively weak center **334**, as shown also by the weak distribution **236**, and with many distributed bright rings.

Full-Width-Half-Maximum (FWHM) of the focused center beams, i.e., centers **34**, **134**, **234**, and **334**, may be precisely measured using a charge-coupled device (CCD), e.g., a 5 mega-pixel CCD detector or another suitable detection and measurement device, and by adjusting the exposure time of the CCD. As will be understood by those of ordinary skill in the art, FWHM is used to describe a measurement of the width of an object when that object does not have sharp edges. The image has a profile which is approximated by a Gaussian curve, given mathematically by: $\exp(-x^2/2\sigma^2)$, with σ being the Gaussian parameter. The width across the profile when it drops to half of its peak value is the full-width half-maximum.

To match the intensity peak height of focal point P**1** and ray point PX, the CCD's exposure time may be increased for the measurement of focal point PX such that data at focal point P**1** is obtained in a shorter scan period relative to that of focal point PX, e.g., a scan of approximately 4 ms for P**1** versus a scan of approximately 6 ms for focal point PX.

In one embodiment, using a laser beam of 532 nm the FWHM at focal point P**1** is approximately 620 nm, and approximately 465 nm at ray point PX. Note that the 465 nm FWHM of ray PX is less than the resolution of the 532 nm laser itself. Therefore, the highly-focused ray point PX may be generated between the conventional focal points P**1** and P**2**, with a sharper and much more narrowly-focused beam profile than that of the conventional focal point P**1**.

The bright center **134** of ray point PX is surrounded by a dark destructive-interference ring **138**. A phase-contrast phenomenon occurs near the center **134**. The phase-contrast phenomenon has a sharpening effect on the center **134**. In terms of the vertical distance on the optical axis **11** (see FIG. **1**), the ray point PX is positioned close to the destructive focal point P**2** (see FIG. **1**), just 2μ in the embodiment shown in FIG. **3**. Therefore the same destructive interference that acts at focal point P**2** forms the surrounding dark interference ring **138** at ray point PX at a position just above or adjacent to focal point P**2** and between focal points P**1** and P**2**, as shown in FIG. **1**. Tuning of the center **134** may be achieved by precise phase-contrasting of the destructive rings of focal point P**2**, e.g., using positioning of the MZP **10**, tuning of the MZP **10** using its electro-optical variant, or any of the optical devices **110**-**510** of FIG. **2**.

Referring to FIG. **4**A, the conventional focal points P**1**-P**5** and the non-conventional focal point or ray point PX are shown for the MXP **10** of FIG. **1**. Note that ray point PX has a sharp FWHM, but it is not a conventional focal point as is P**1**, P**2**, etc. The conventional focal points P**1**-P**5** of MZP **10** have an intensity (plotted on the Y-axis) that is measured at the center **34**, **134**, **234**, **334** (see FIG. **3**) on optical axis **11** (see FIG. **1**). The x-axis in FIG. **4**A is oriented toward the MZP **10** shown in FIG. **1**, i.e., focal point P**5** is closer to the plane of the MZP **10** than are points PX and P**1**.

The focal points P**1**-P**5** have alternating maximum and minimum intensities such that focal points P**1**, P**3**, and P**5** are the maxima and focal points P**2** and P**4** are the minima, as will be understood by those of ordinary skill in the art. The non-conventional photonic ray point PX is neither a conventional maximum nor minimum focal point, but rather an intermediate point formed between points P**1** and P**2** as noted above.

Referring to FIG. **4**B, line **40** shows a conventional Gaussian distribution of photons at a representative focal point using a conventional lens. Line **42** shows the ultra-sharp distribution of photons at non-conventional ray point PX. Line **42** is surrounded by one or multiples of destructive interference rings **138** (see FIG. **3**). The phase contrast effect shown at points **44** and **46** removes the tail of a Gaussian distribution of the central spot of ray point PX and minimizes the FWHM, i.e., sharpens the spot.

If a 10 mW laser having a 2 mm beam diameter, i.e., a density of 0.3 W/cm^2, is roughly focused on MZP **10** of FIG. **1**, and the MZP **10** is used to focus 10% of these photons on ray point PX, the power density of the beam at ray point PX is approximately 10^5 W/cm^2. In another embodiment the power density is approximately 10^3 W/cm^2. Such extreme densities may be powerful enough to melt steel, for example, in a zone within the FWHM diameter. Therefore, the focusing of a beam at ray point PX brings the ultra-high power density required for many applications, including but not limited to optical data storage, sub-wavelength optical lithography, nano-fabrication, optical manipulation of molecules and nano-structures, etc.

Referring to FIG. **5**, a rough comparison may be made of different spot-sizes from a conventional lens **60** with parallel light (arrows **19**), a Gaussian laser dispersion **21**, and a phase-contrast mode using the method and apparatus described above, using the same green laser or parallel light with a 532 nm wavelength. The typical spot size of a conventional lens **60** with a parallel light may be described as:

$$W \approx k\frac{\lambda f}{a} = k\frac{\lambda}{N.A.}$$

where N.A. is the numerical aperture and k is a proportional factor that is dependent on the optic system design. In a fabricated micro-zone-plate such as the MZP **10** of FIG. **1**, f=18 micrometers and a=10 micrometers. Therefore, the expected spot size is 957 nm with a conventional lens of k=1. A measured FWHM of the photon distribution of 465 nm means that its k value is approximately 0.5. Therefore, an ultra-sharply focused light at non-conventional ray point PX may be obtained between two successive focal points, e.g., P**1** and P**2**, where one point (P**1**) is constructive and the other (P**2**) is destructive, using the MZP **10** of FIG. **1** or any of the optical devices **110**-**510** of FIG. **5**.

While the best modes for carrying out the invention have been described in detail, those familiar with the art to which this invention relates will recognize various alternative designs and embodiments for practicing the invention within the scope of the appended claims.

The invention claimed is:

1. An optical apparatus comprising: an optical diffraction device configured for diffracting a predetermined wavelength of incident light onto adjacent optical focal points, wherein one of the optical focal points is a constructive interference point due to constructive interference between two light diffraction orders and the other optical focal point is a destructive interference point due to destructive interference between two light diffraction orders; and a photon detector operable for detecting a spectral characteristic of the predetermined wavelength; wherein the diffraction device is

adapted for generating a constructive ray point using phase-contrasting of the destructive interference point, the ray point being located between the adjacent optical focal points.

2. The apparatus of claim **1**, wherein the optical diffraction device includes a plurality of coaxially-aligned micro-ring gratings.

3. The apparatus of claim **2**, further comprising an electro-optical layer positioned adjacently to the coaxially-aligned micro-ring gratings, wherein the phase-contrasting is achieved at least in part by selectively applying a voltage to the electro-optical layer.

4. The apparatus of claim **3**, wherein the electro-optical layer is constructed of one of: a liquid crystal, a non-linear optical crystal, and an electro-optical polymer.

5. The apparatus of claim **1**, wherein the ray point has a power density of at least approximately 10^3 watt/cm^2.

6. The apparatus of claim **1**, wherein the optical diffraction device includes one of a concave lens and a convex lens.

7. An optical apparatus comprising: a micro-zone plate (MZP) having a plurality of coaxially-aligned micro-ring gratings configured for diffracting a predetermined wavelength of incident light from a sample onto a constructive interference focal point and a destructive interference focal point, the destructive interference focal point having a series of concentric destructive rings; and a photon detector operable for measuring an intensity of the predetermined wavelength; wherein the constructive interference focal point is due to constructive interference between two light diffraction orders and the destructive interference focal point is due to destructive interference between two light diffraction orders; and wherein the apparatus is adapted for phase-contrasting the concentric destructive rings to generate a constructive ray point between the constructive interference focal point and the destructive interference focal point.

8. The apparatus of claim **7**, wherein the MZP has a diameter of approximately 20 micrometers to approximately 30 micrometers, and has a transparent center disk having a diameter of approximately 5 microns to approximately 10 microns.

9. The apparatus of claim **8**, wherein the MZP has a diameter of approximately 22 micrometers, and wherein the transparent center disk has a diameter of approximately 7 micrometers.

10. The apparatus of claim **7**, wherein a first focal length between the MZP and the constructive interference focal point is approximately 46 micrometers to approximately 47 micrometers, and wherein a second focal length between the MZP and the destructive interference focal point is approximately 15 micrometers to approximately 16 micrometers.

11. The apparatus of claim **7**, wherein the spacing between the destructive interference focal point and the constructive ray point is approximately 2 micrometers.

12. The apparatus of claim **7**, wherein the wavelength of the incident light is greater than the diameter of the constructive ray point.

13. The apparatus of claim **7**, wherein the focal length between the MZP and the constructive ray point is approximately 16 micrometers.

14. The apparatus of claim **7**, further comprising an electro-optical layer, wherein the phase-contrasting is achieved at least in part by selectively applying a voltage to the electro-optical layer.

15. A method of generating a densely-accumulated ray point using an optical diffraction device, the method comprising: directing incident light onto the optical diffraction device, wherein the optical diffraction device is configured for diffracting a selected wavelength of the incident light onto a constructive interference focal point and a destructive interference focal point, the destructive interference focal point having a series of concentric destructive rings; diffracting the selected wavelength onto the constructive interference focal point and the destructive interference focal point using the optical diffraction device; phase-contrasting the concentric destructive rings using the optical diffraction device to thereby generate the ray point; and detecting a spectral characteristics of the selected wavelength using a photon detector; wherein the constructive interference focal point is due to constructive interference between two light diffraction orders and wherein the destructive interference focal point is due to destructive interference between two light diffraction orders.

16. The method of claim **15**, wherein directing incident light onto the optical diffraction device includes directing a laser onto a micro-zone plate (MZP).

17. The method of claim **15**, wherein the laser has a wavelength of approximately 532 nanometers, and wherein the MZP has a diameter of approximately 22 micrometers and a transparent center disk of approximately 7 micrometers.

18. The method of claim **15**, including an electro-optical layer positioned adjacently to the MZP, wherein diffracting the selected wavelength includes generating an electrical field with respect to the MZP to thereby vary a refractive index of the electro-optical layer.

19. The method of claim **15**, further comprising:

using the ray point in a process selected from the group consisting of: sub-wavelength optical lithography, nano-fabrication, and optical manipulation of molecules.

* * * * *