US005879079A

United States Patent [19]

Hohmann et al.

[11] **Patent Number: 5,879,079**

[45] **Date of Patent: Mar. 9, 1999**

[54] **AUTOMATED PROPELLANT BLENDING**

[75] Inventors: **Carl W. Hohmann**; **Douglas W. Harrington**, both of Houston; **Maureen L. Dutton**, Friendswood; **Billy Charles Tipton, Jr.**; **James W. Bacak**, both of Houston; **Frank Salazar**, Texas City, all of Tex.

[73] Assignee: **The United States of America as represented by the Administrator, of the National Aeronautics and Space Administration**, Washington, D.C.

[21] Appl. No.: **917,581**

[22] Filed: **Aug. 20, 1997**

[51] **Int. Cl.**[6] **B01F 15/02**

[52] **U.S. Cl.** **366/151.1**; 422/163; 366/150.1; 366/241; 366/279; 137/93

[58] **Field of Search** 366/151.1, 150.1, 366/152.1, 132, 168.1, 241, 279; 137/93; 422/163, 224, 225, 135, 67, 62

[56] **References Cited**

U.S. PATENT DOCUMENTS

3,495,808	2/1970	Klien et al.	366/142
3,529,936	9/1970	Müller-Rid et al. .	
3,766,820	10/1973	Forsten et al.	422/163
3,891,366	6/1975	Rushford	366/151.1
4,014,655	3/1977	Brunnberg .	
4,213,712	7/1980	Aanonsen et al.	422/163
4,461,660	7/1984	Binet et al.	149/2
4,531,840	7/1985	Clark	366/142
4,614,146	9/1986	Ross et al.	86/20
4,767,476	8/1988	Gebaner	422/163
4,836,685	6/1989	Verreault	366/141
4,876,653	10/1989	McSpadden et al.	364/479
5,071,562	12/1991	Allington et al.	366/152.1
5,110,521	5/1992	Moller	264/40.4
5,332,309	7/1994	Ramazzotti et al.	366/152.1
5,368,385	11/1994	Adamo et al.	366/139
5,460,671	10/1995	Khandhadia	149/109.6
5,472,532	12/1995	Wallace, II	149/17.4
5,547,276	8/1996	Sulzbach et al.	366/152.1

OTHER PUBLICATIONS

McLain, Joseph Howard, *PYROTECHNICS From the Viewpoint of Solid State Chemistry*, pp. 209–211 (1980).

Primary Examiner—Tony G. Soohoo
Attorney, Agent, or Firm—Hardie R. Barr

[57] **ABSTRACT**

An automated propellant blending apparatus and method uses closely metered addition of countersolvent to a binder solution with propellant particles dispersed therein to precisely control binder precipitation and particle aggregation. A profile of binder precipitation versus countersolvent-solvent ratio is established empirically and used in a computer algorithm to establish countersolvent addition parameters near the cloud point for controlling the transition of properties of the binder during agglomeration and finishing of the propellant composition particles. The system is remotely operated by computer for safety, reliability and improved product properties, and also increases product output.

12 Claims, 19 Drawing Sheets

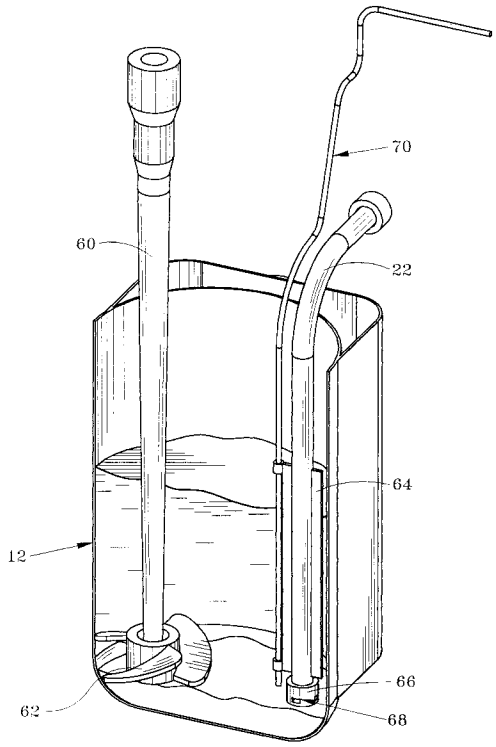

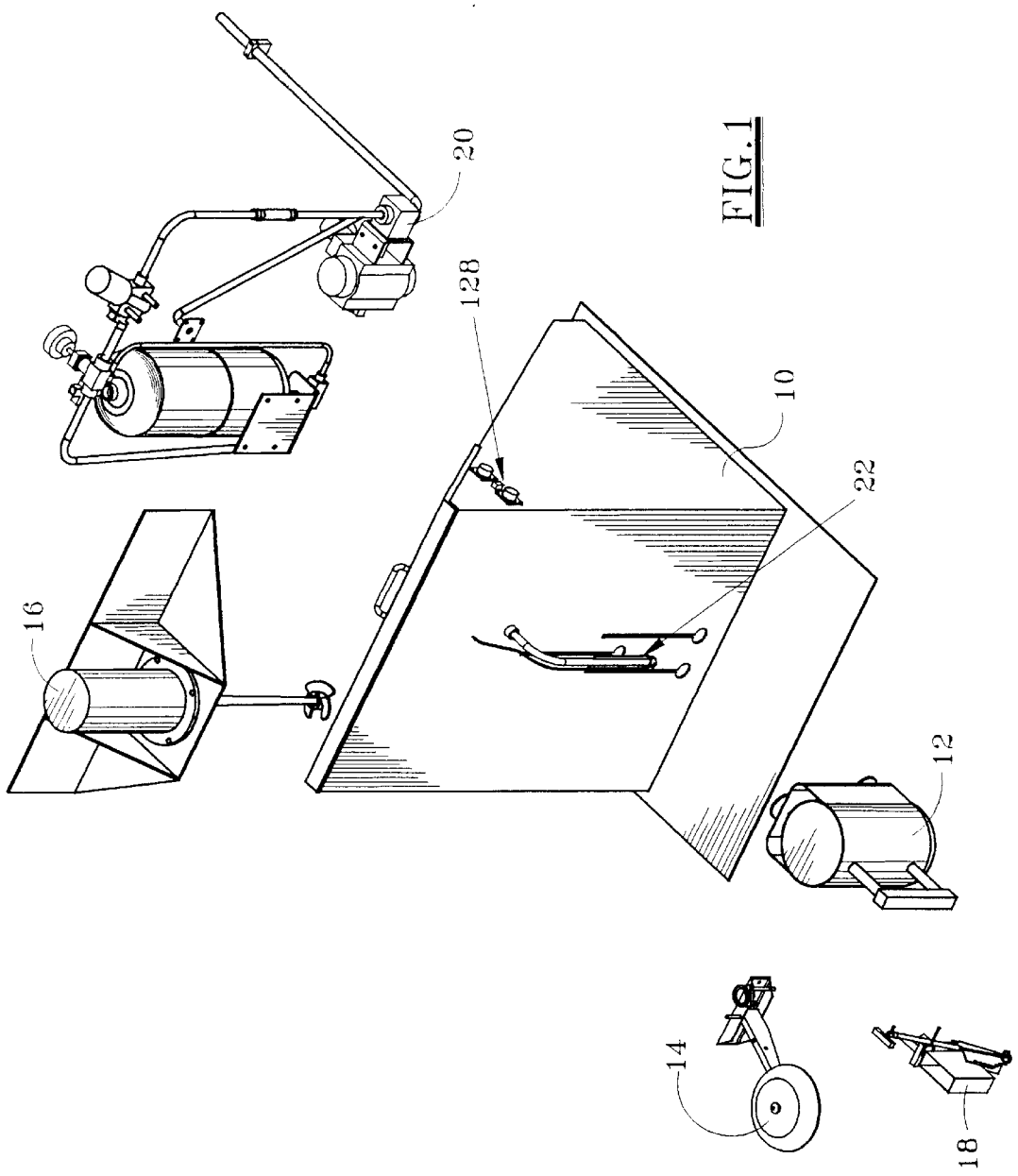

FIG. 1

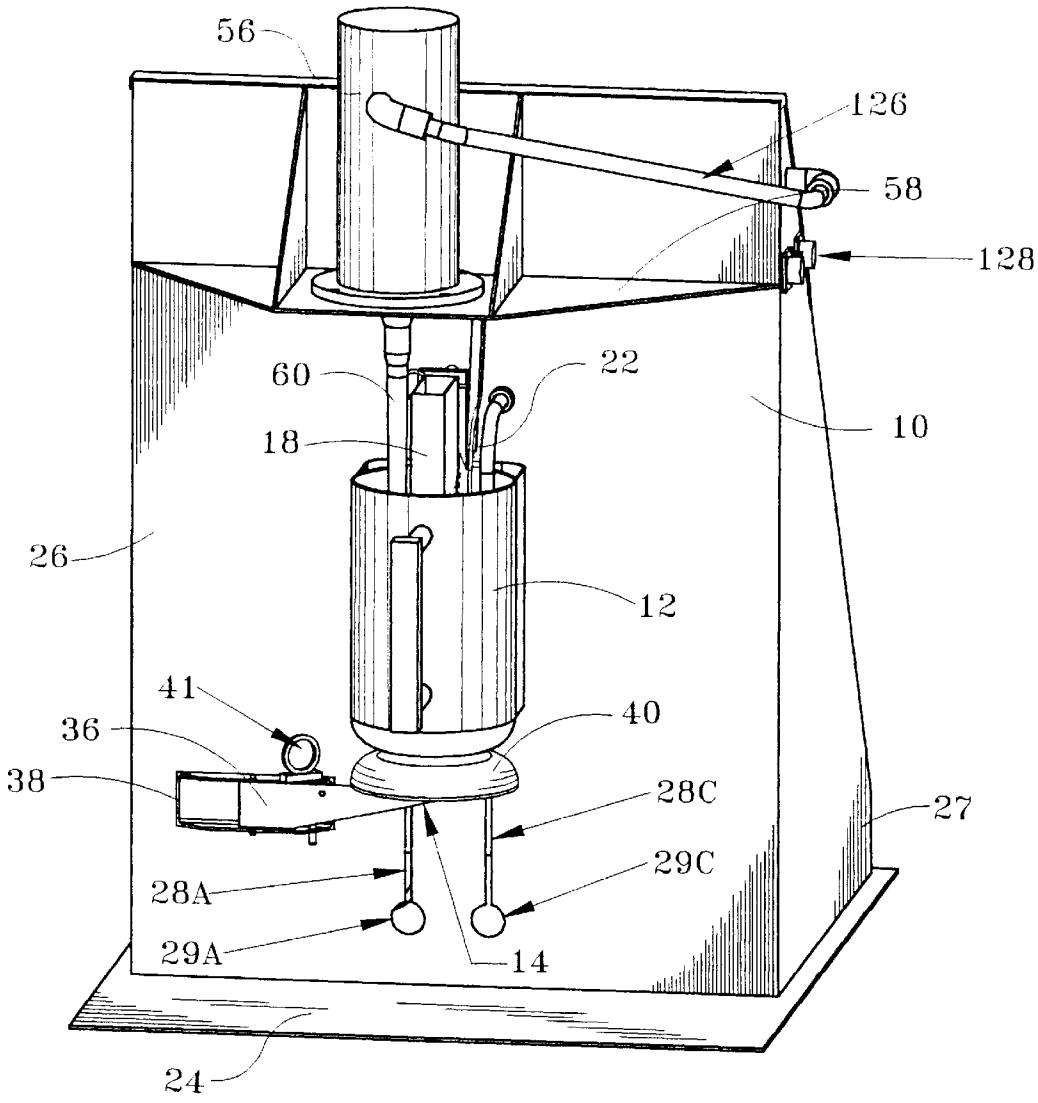

FIG.2

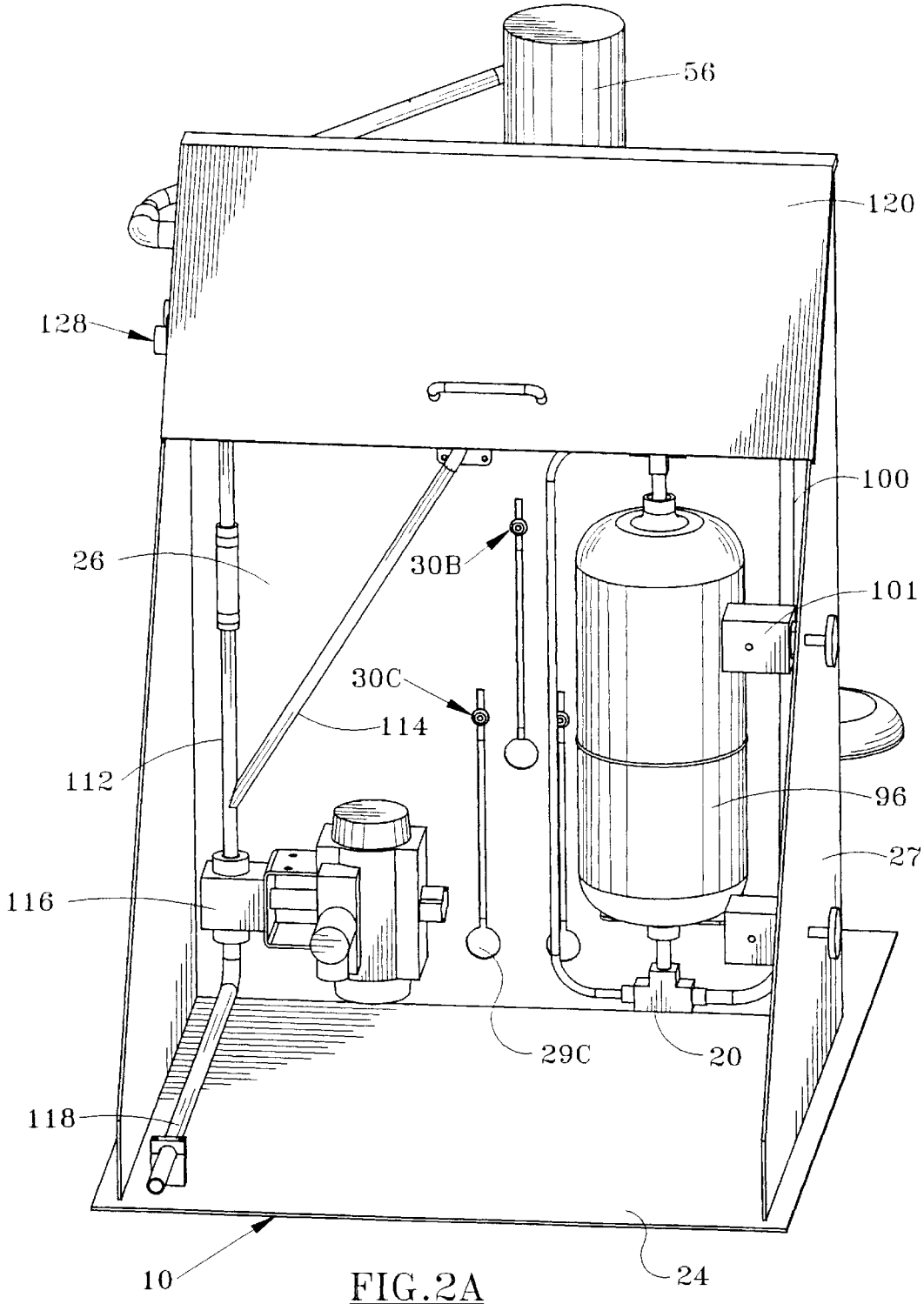

FIG.2A

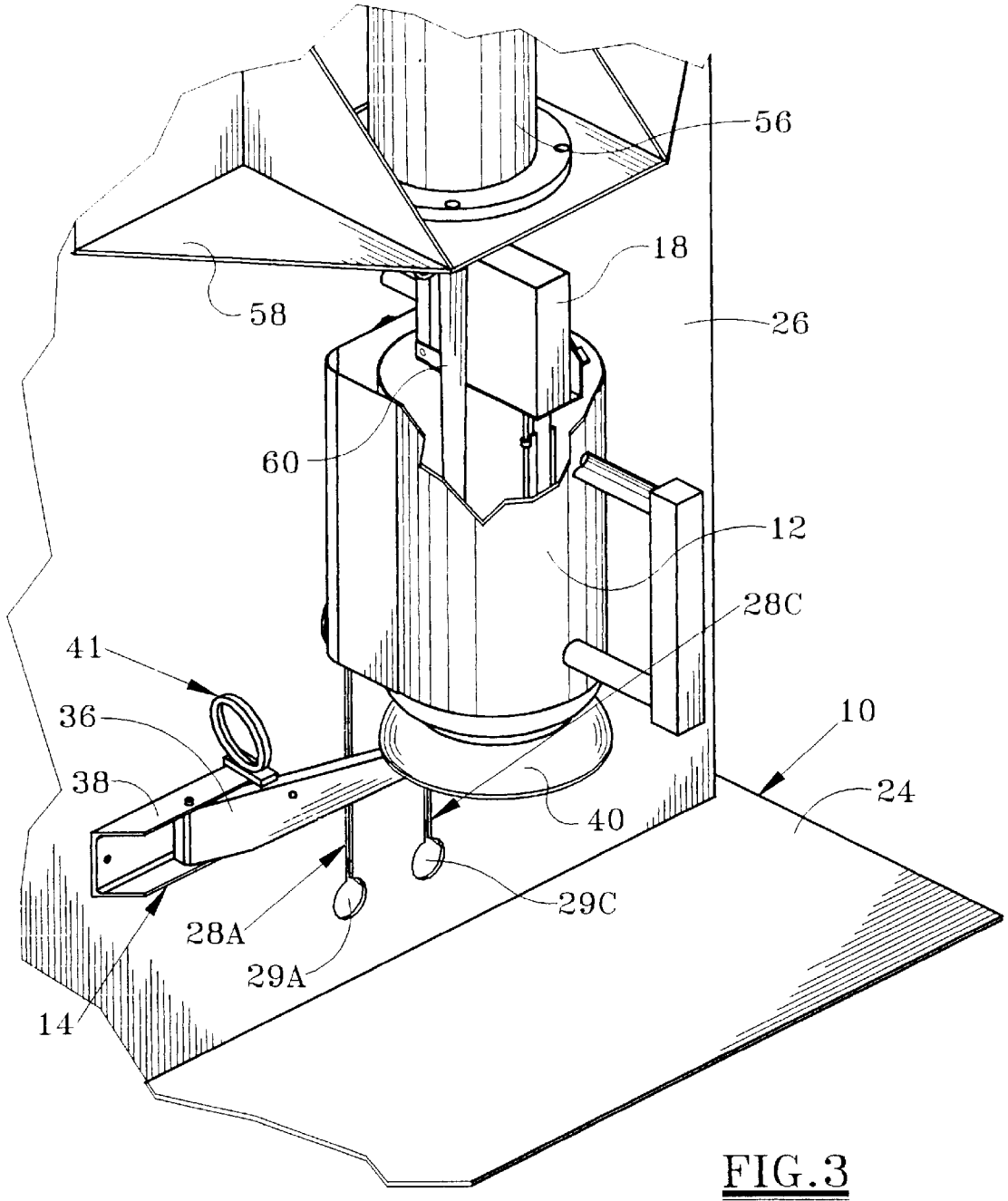

FIG.3

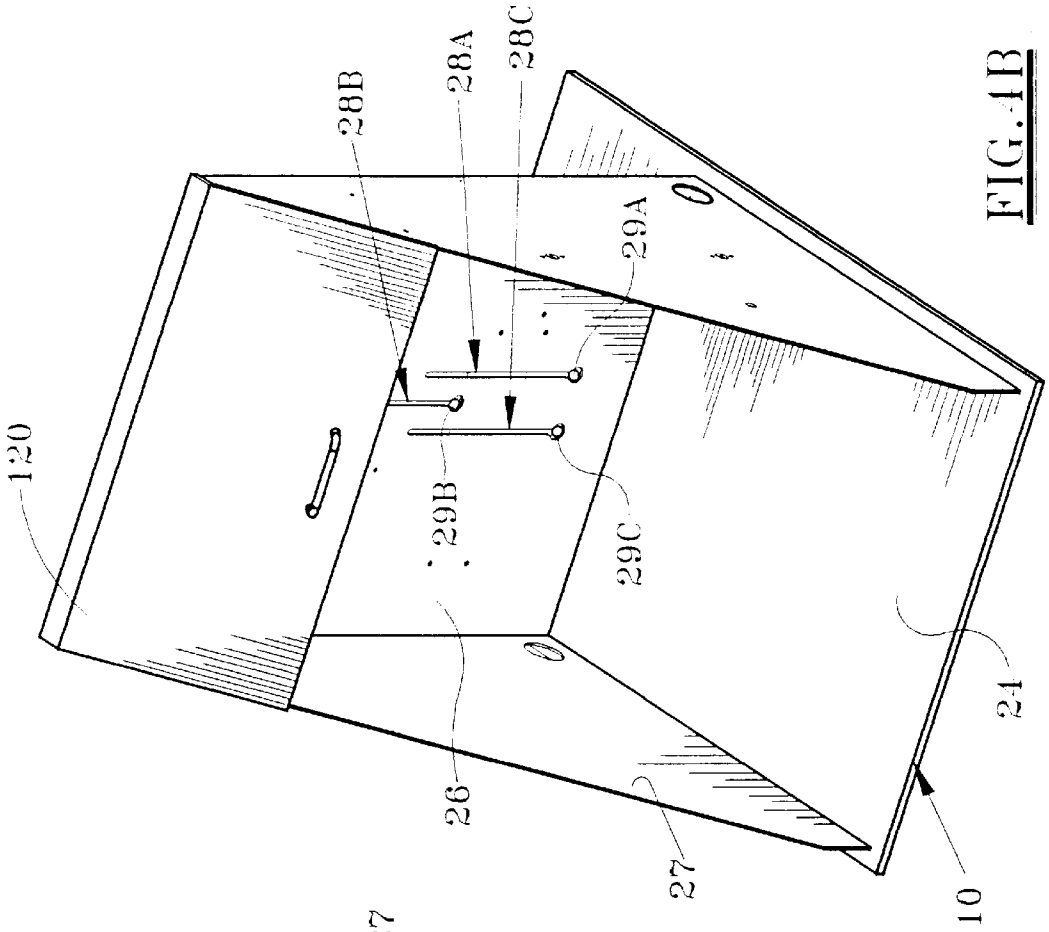
120
28B
28A
28C
29A
29B
29C
26
27
24
10

FIG.4B

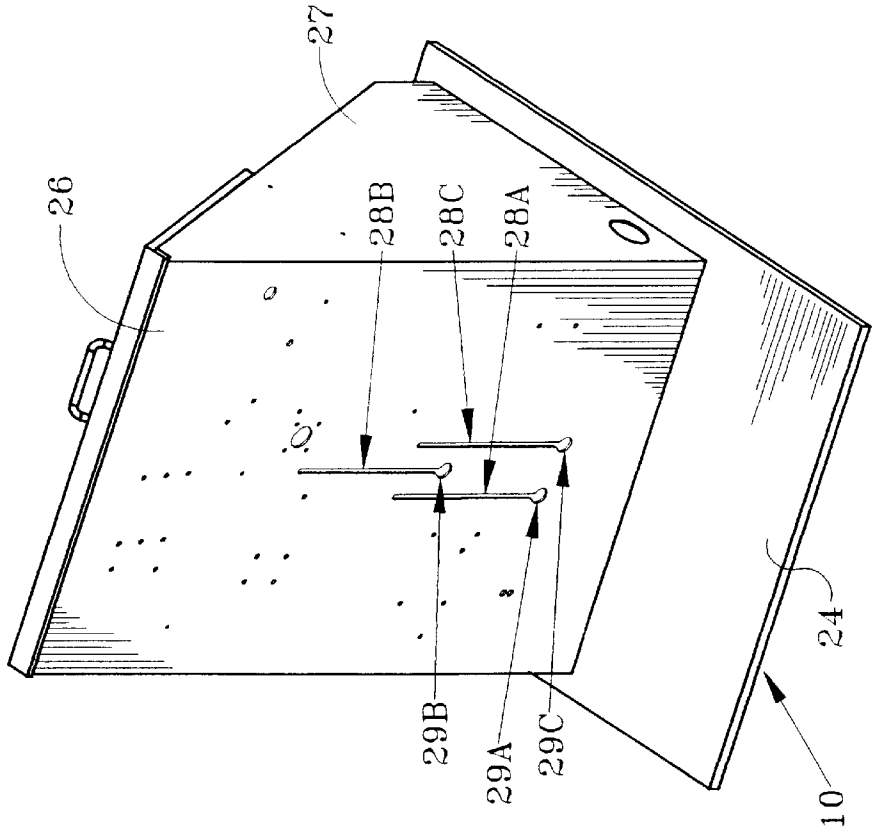
26
27
28B
28C
28A
29B
29A
29C
24
10

FIG.4A

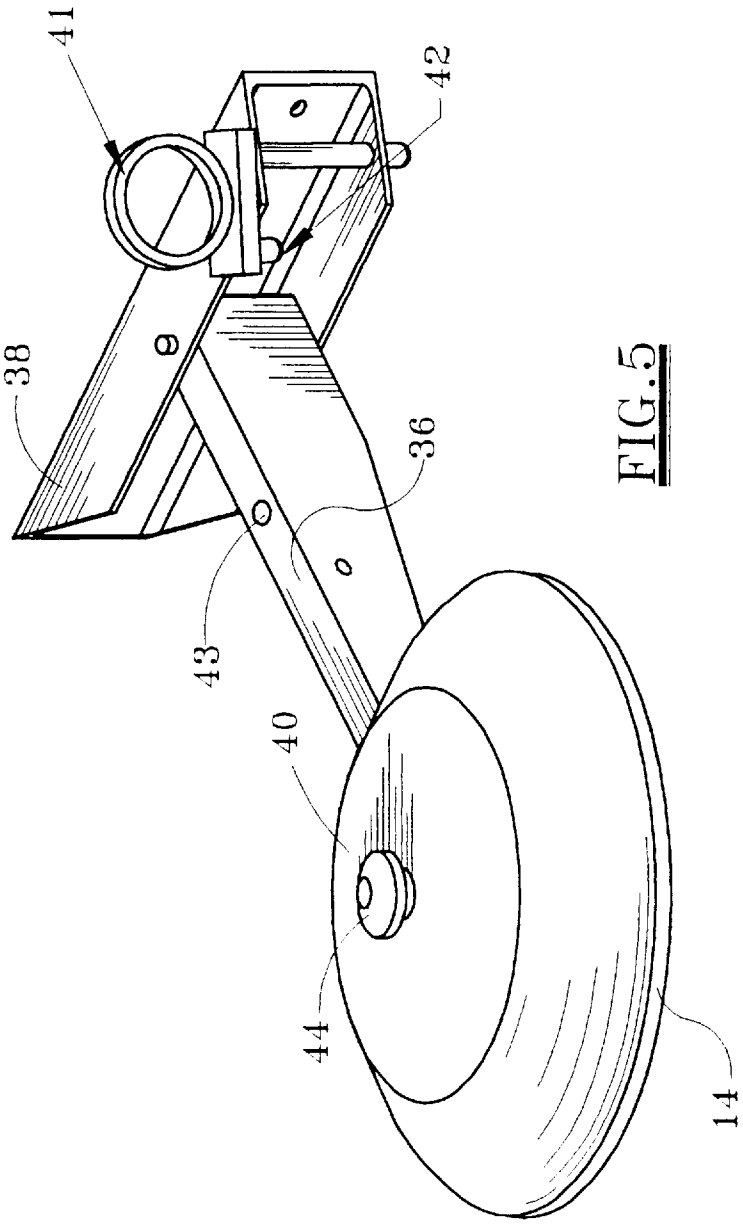

FIG.5

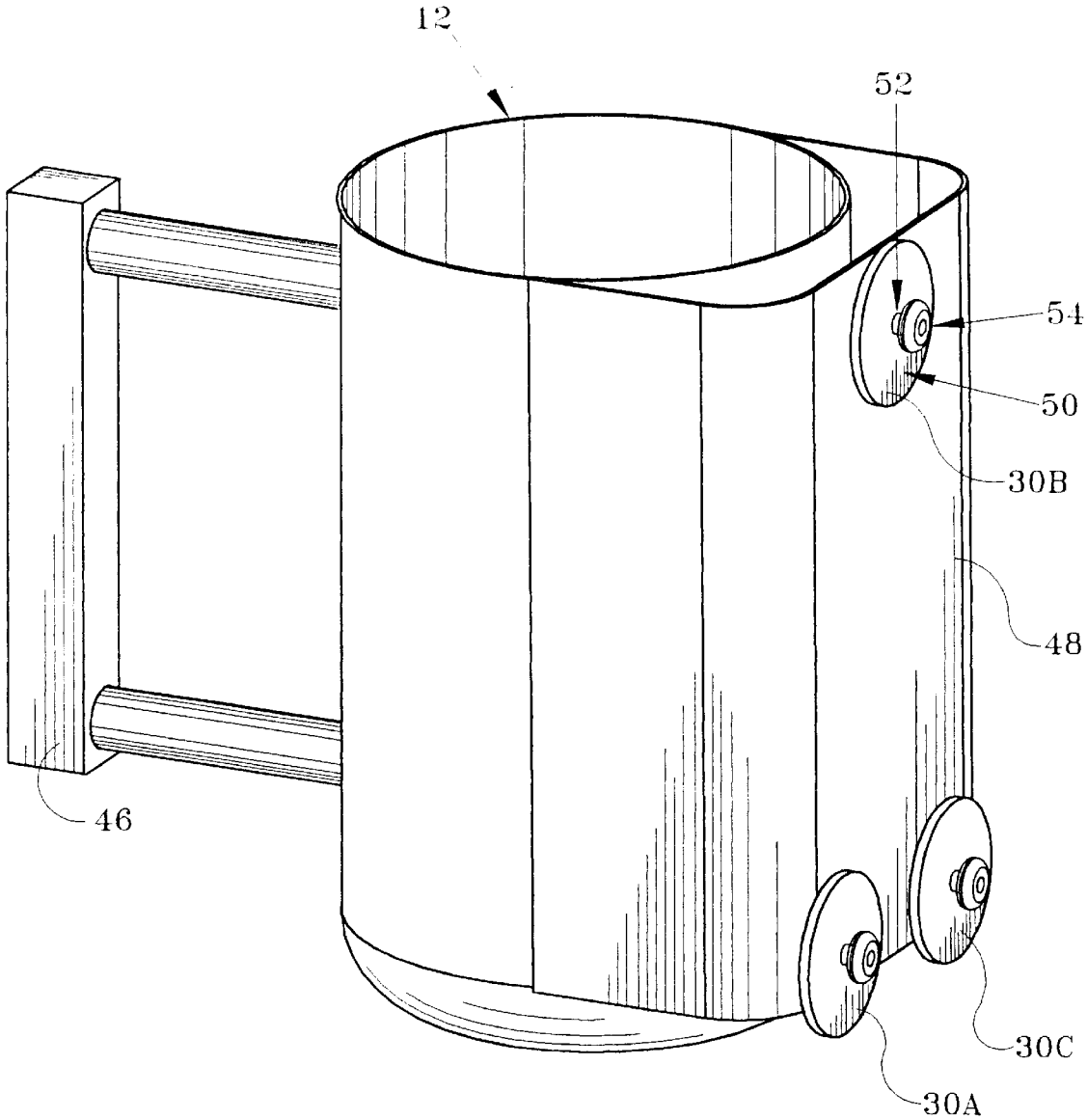

FIG.6

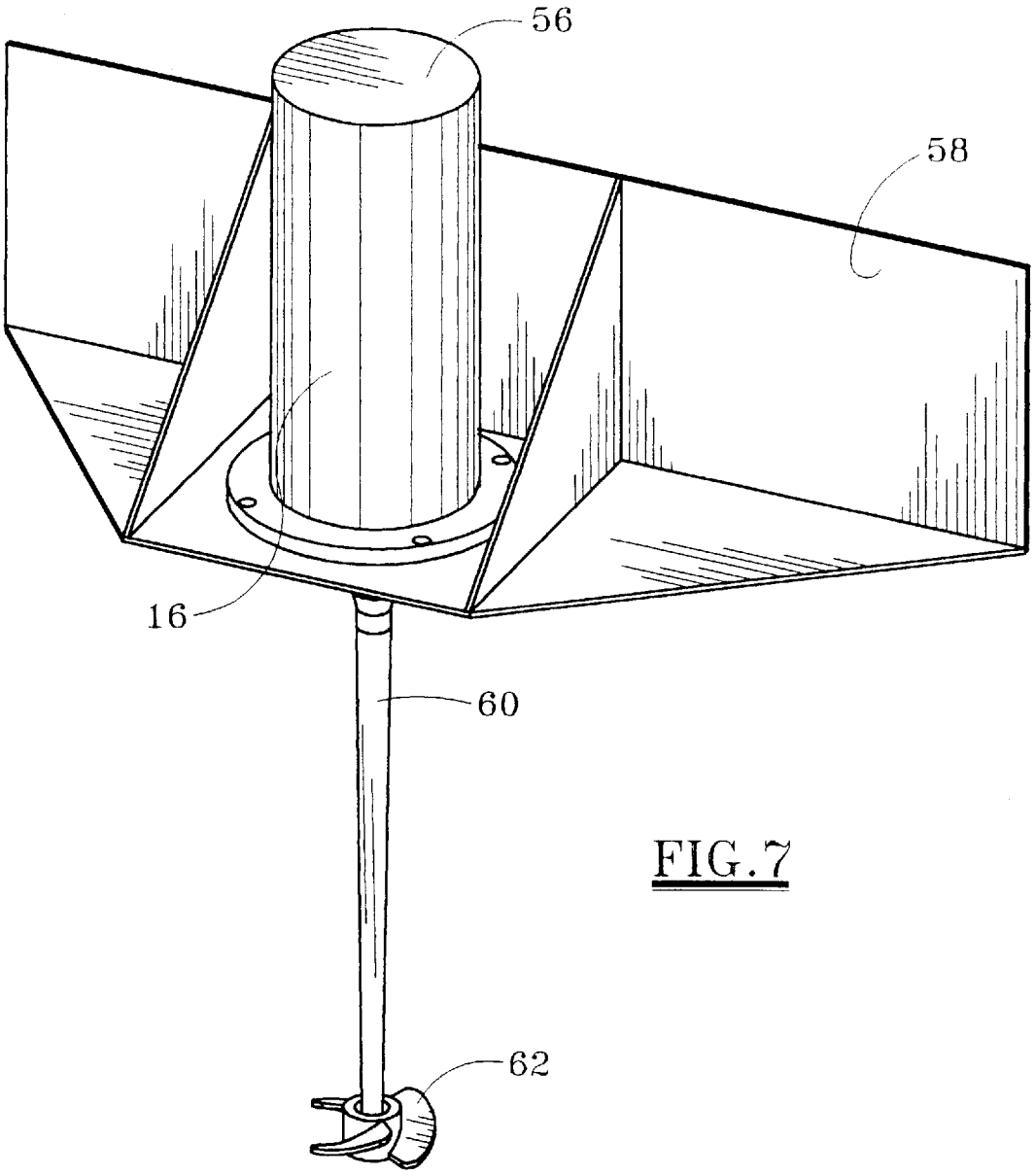

FIG. 7

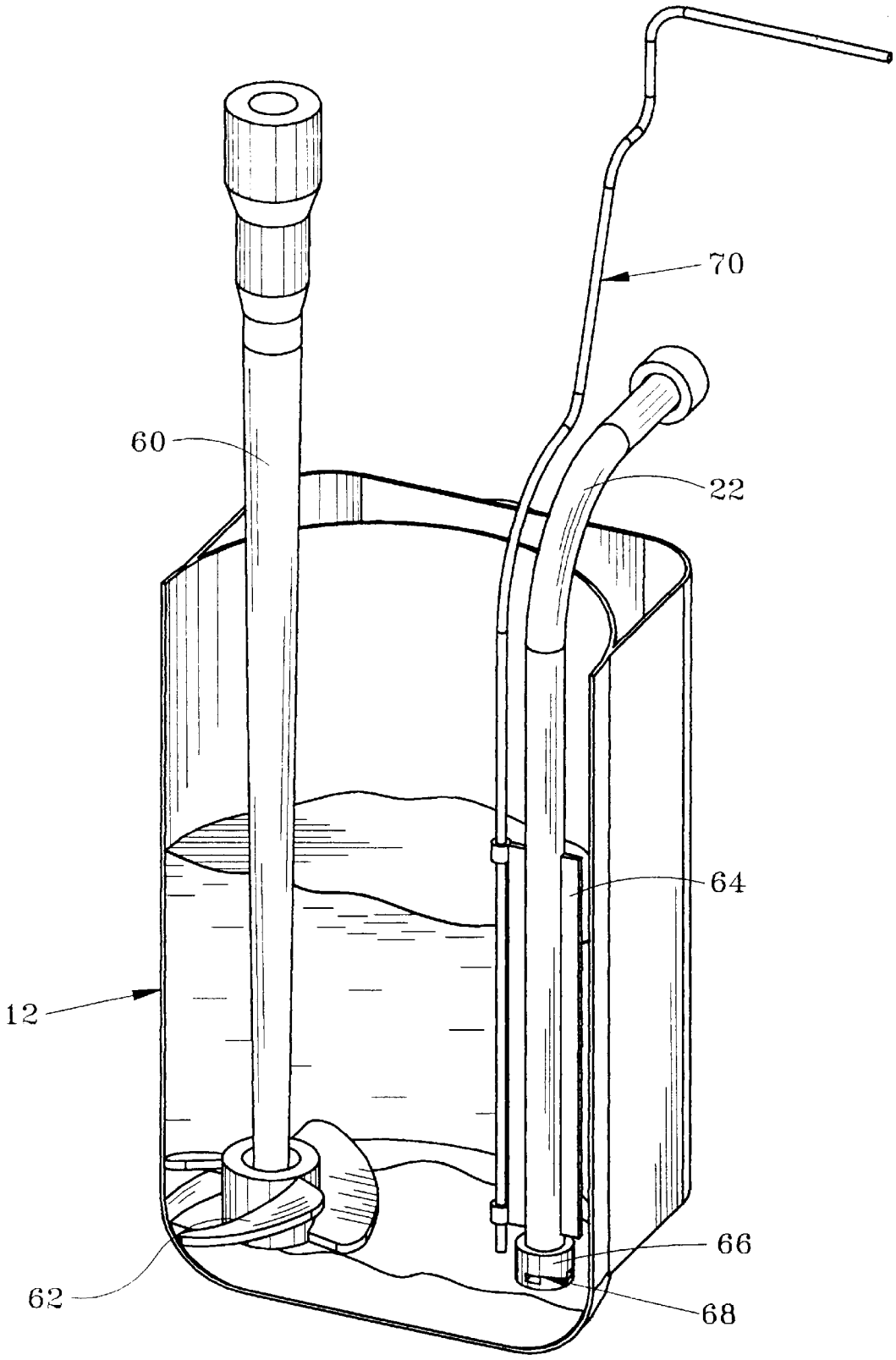

FIG.8

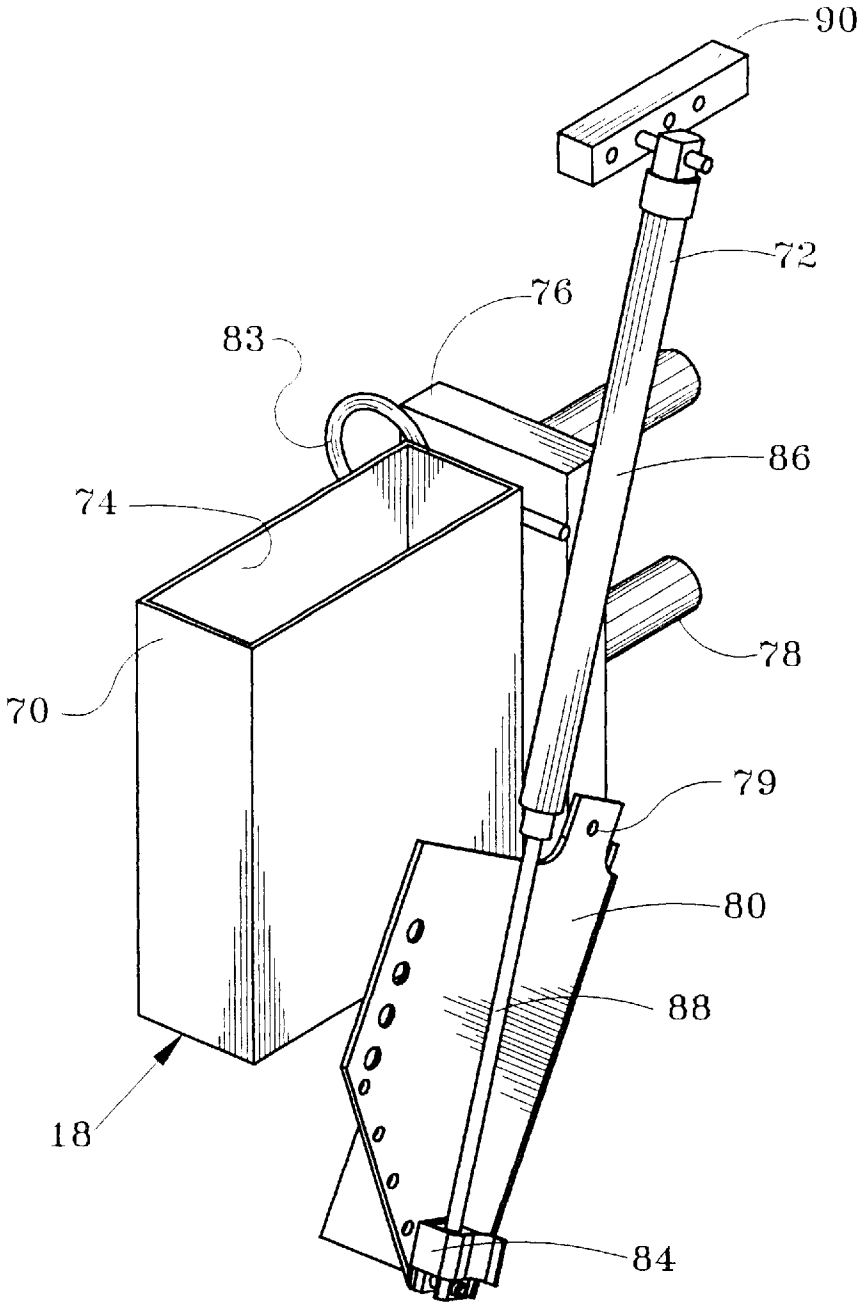

FIG.9

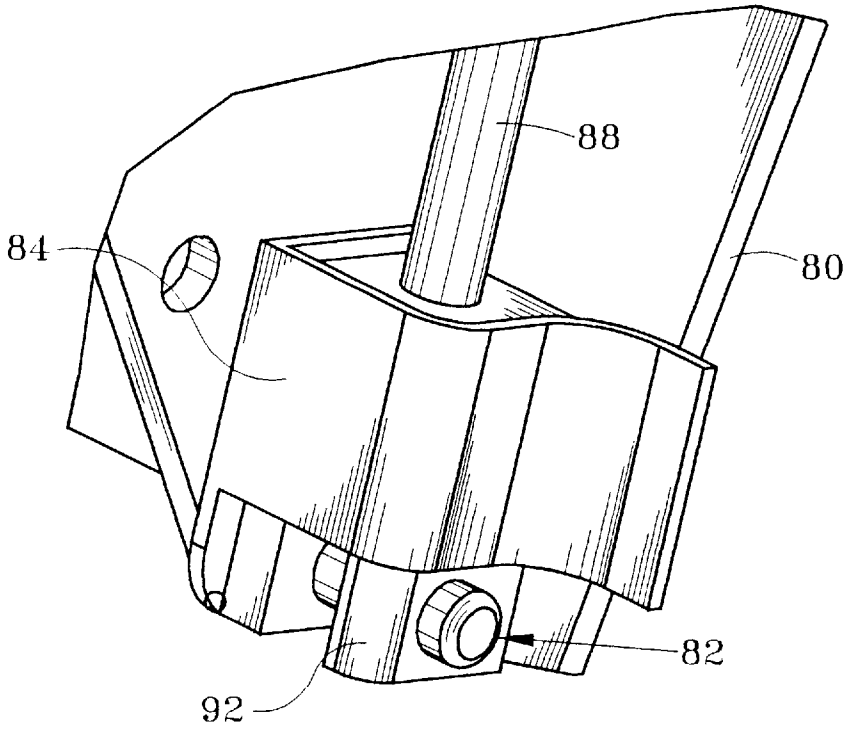

FIG.9A

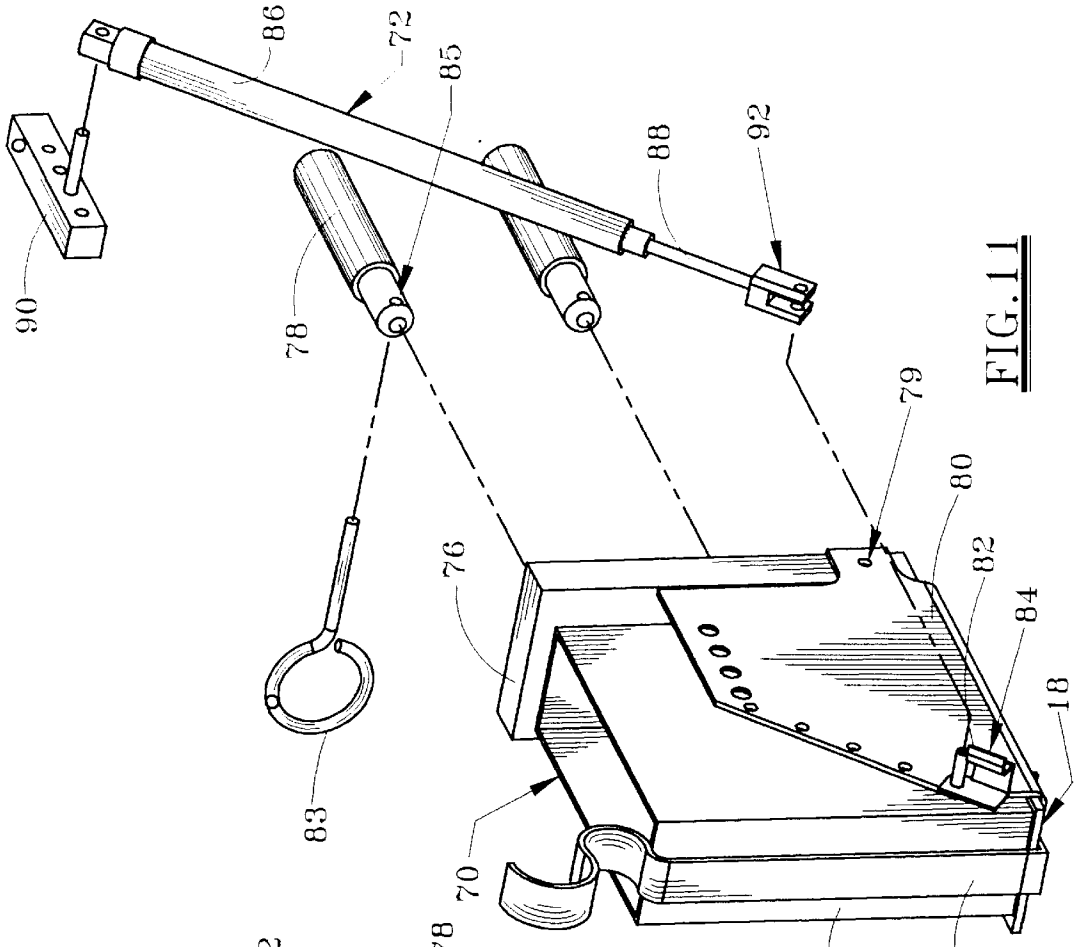
86
72
85
88
92
90
78
79
80
76
82
84
18
83
70
74
81

FIG. 11

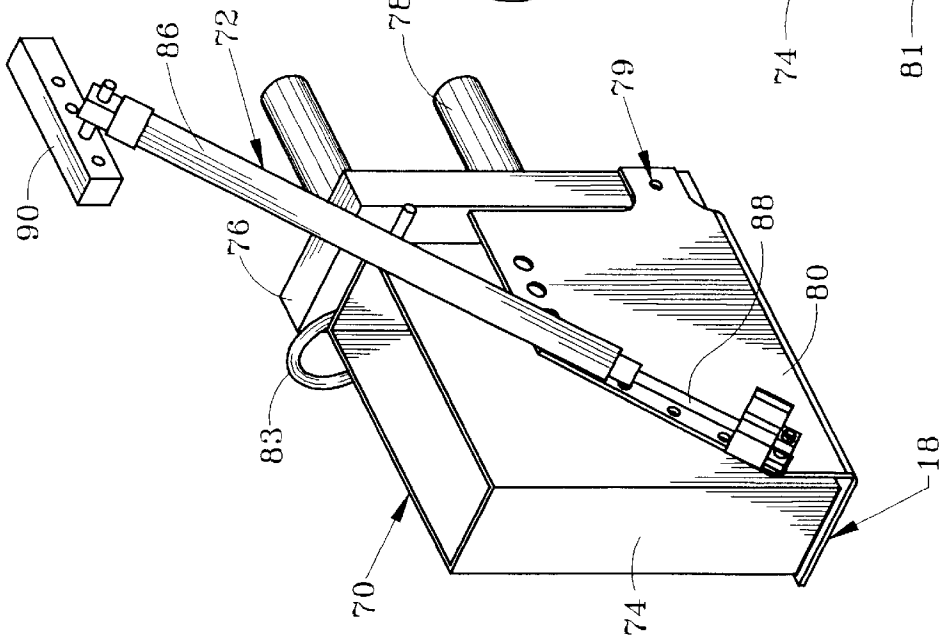
86
72
78
79
90
76
88
80
83
18
70
74

FIG. 10

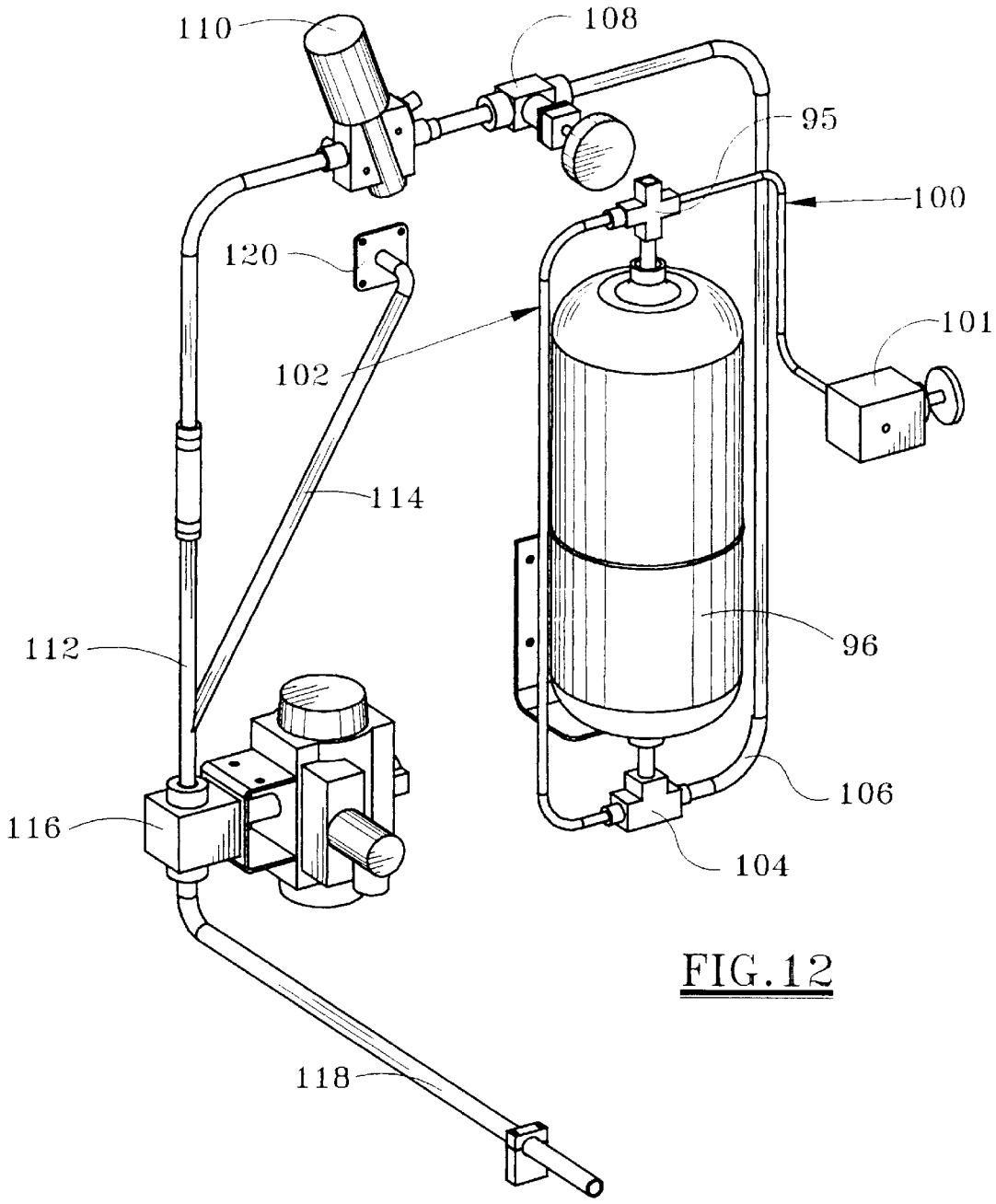

FIG. 12

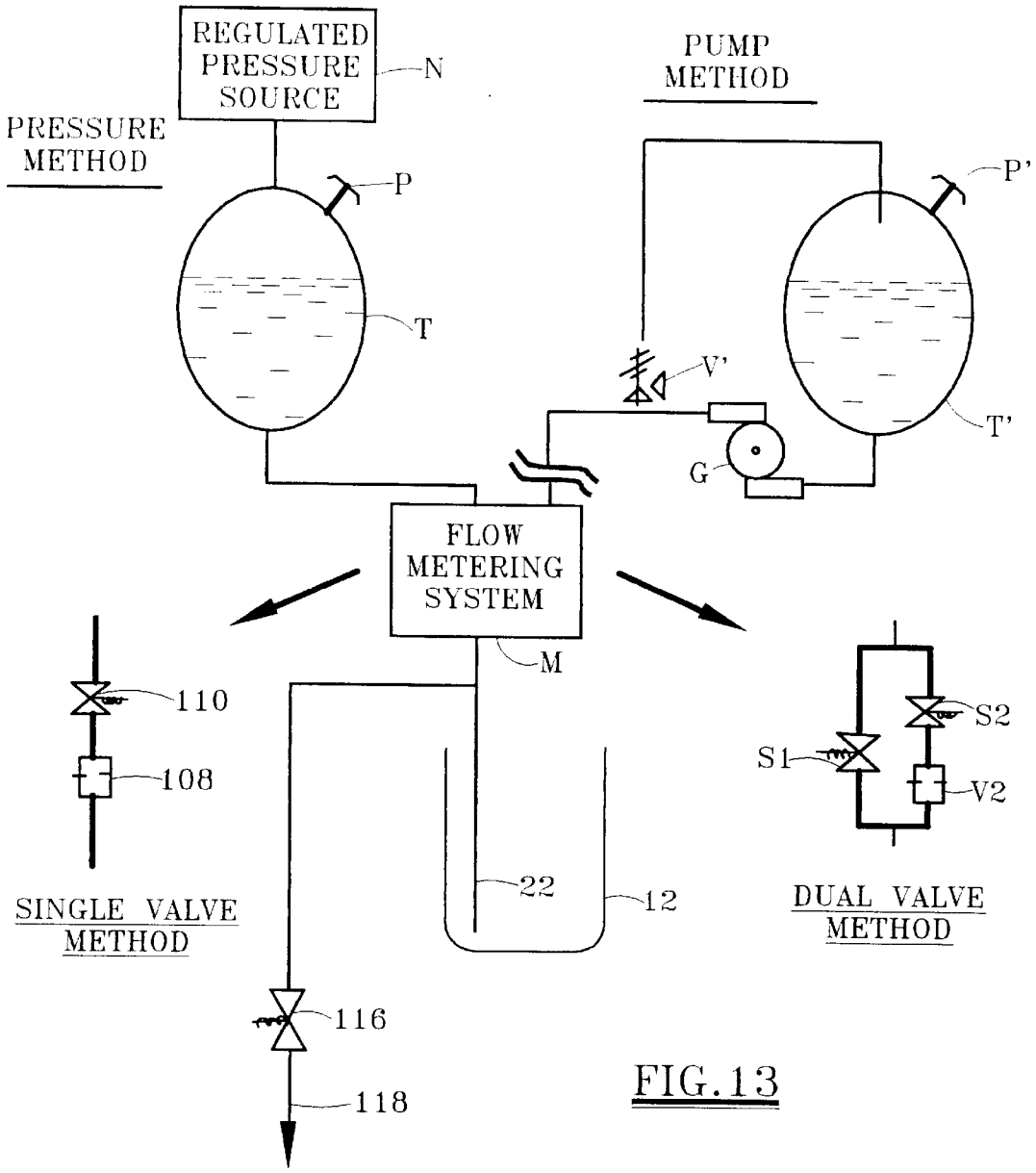
REGULATED PRESSURE SOURCE
N
PRESSURE METHOD
P
T
PUMP METHOD
P'
V'
T'
G
FLOW METERING SYSTEM
M
110
108
SINGLE VALVE METHOD
S2
S1
V2
DUAL VALVE METHOD
22
12
116
118

FIG. 13

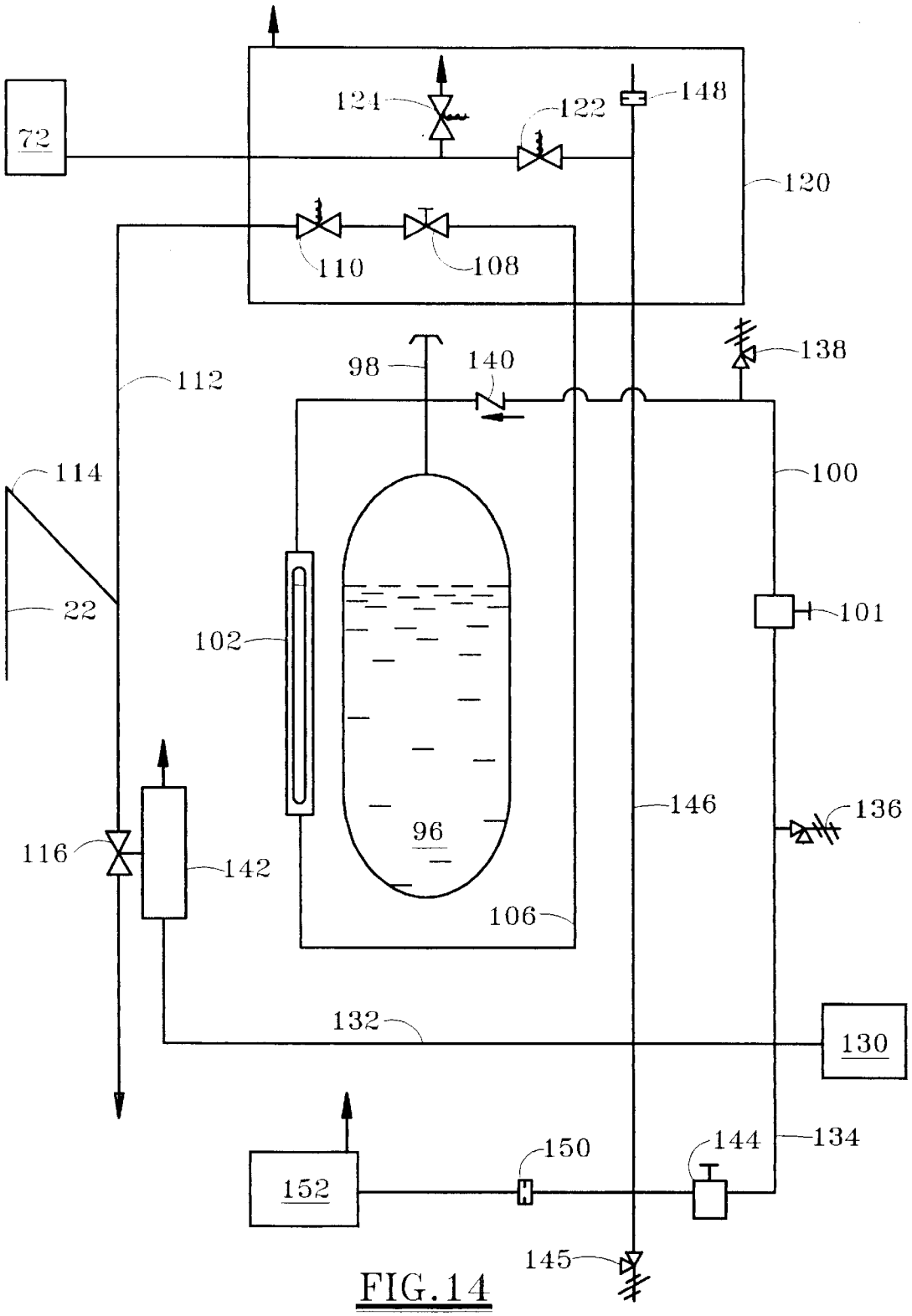
72
124
122
148
120
110
108
98
140
138
112
114
100
22
101
102
146
136
96
116
142
106
132
130
150
144
134
152
145

FIG. 14

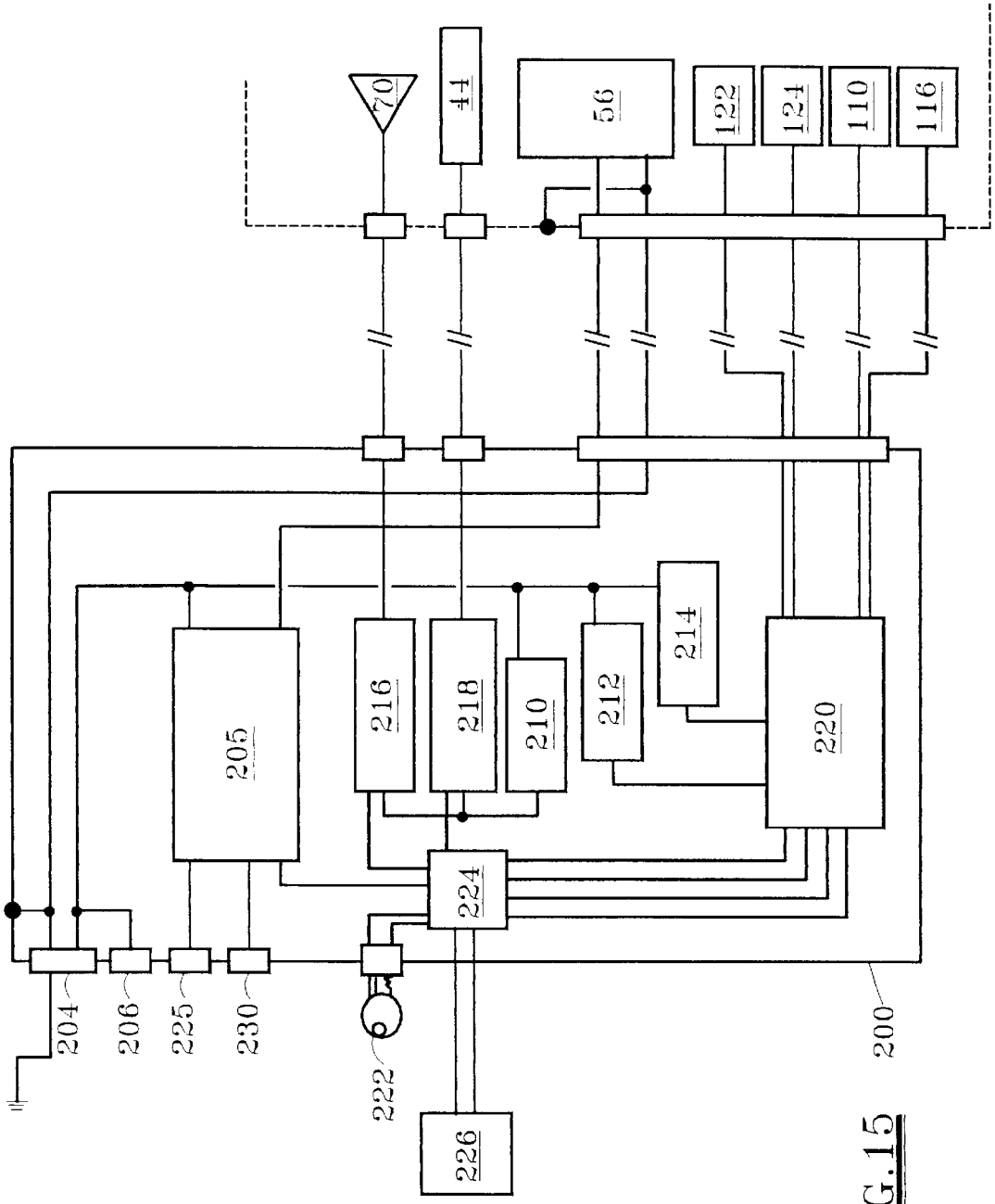
70
44
56
122
124
110
116
205
216
218
210
212
214
220
224
204
206
225
230
222
226
200

FIG.15

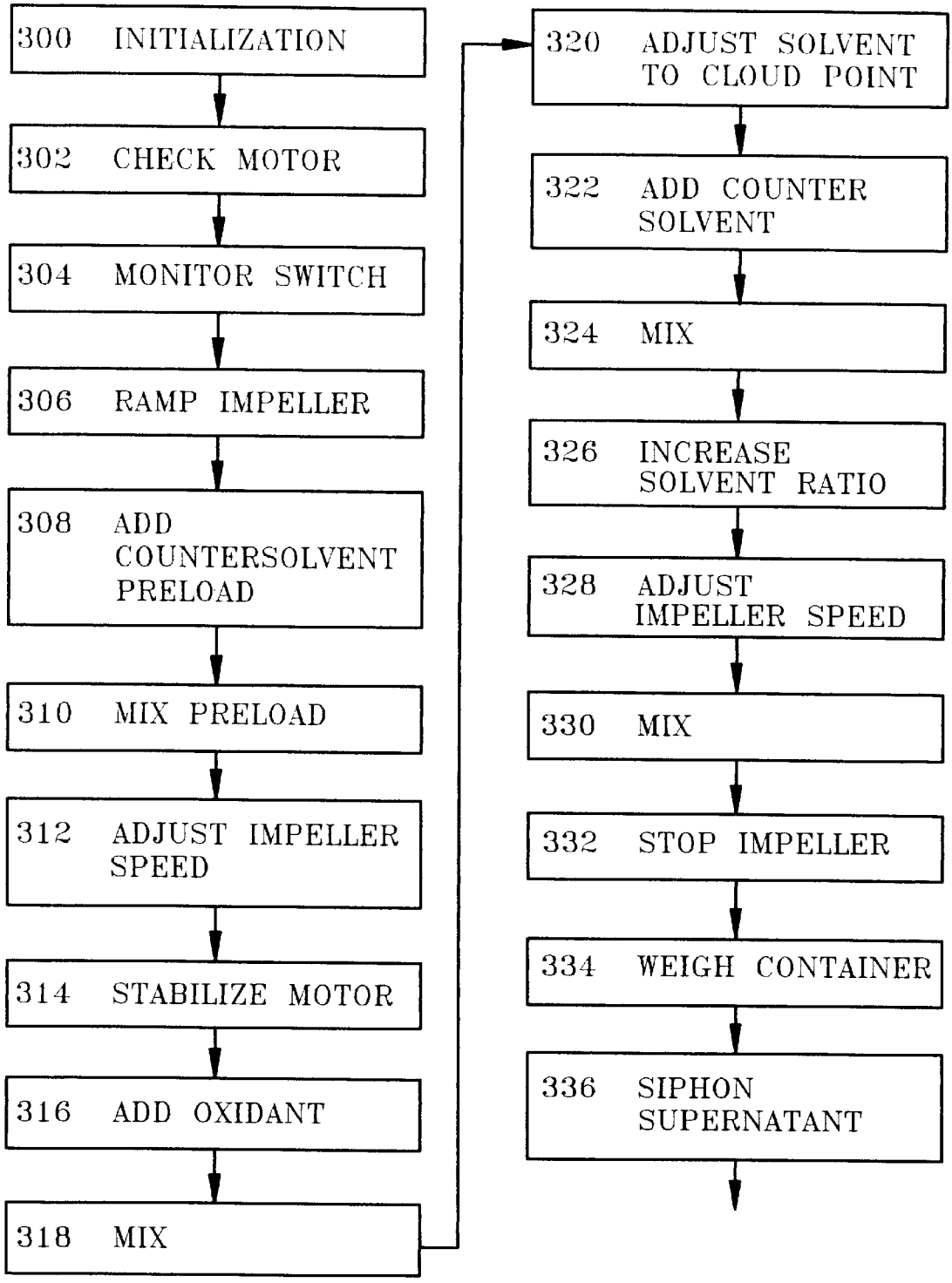
300 INITIALIZATION
302 CHECK MOTOR
304 MONITOR SWITCH
306 RAMP IMPELLER
308 ADD COUNTERSOLVENT PRELOAD
310 MIX PRELOAD
312 ADJUST IMPELLER SPEED
314 STABILIZE MOTOR
316 ADD OXIDANT
318 MIX
320 ADJUST SOLVENT TO CLOUD POINT
322 ADD COUNTER SOLVENT
324 MIX
326 INCREASE SOLVENT RATIO
328 ADJUST IMPELLER SPEED
330 MIX
332 STOP IMPELLER
334 WEIGH CONTAINER
336 SIPHON SUPERNATANT

FIG. 16

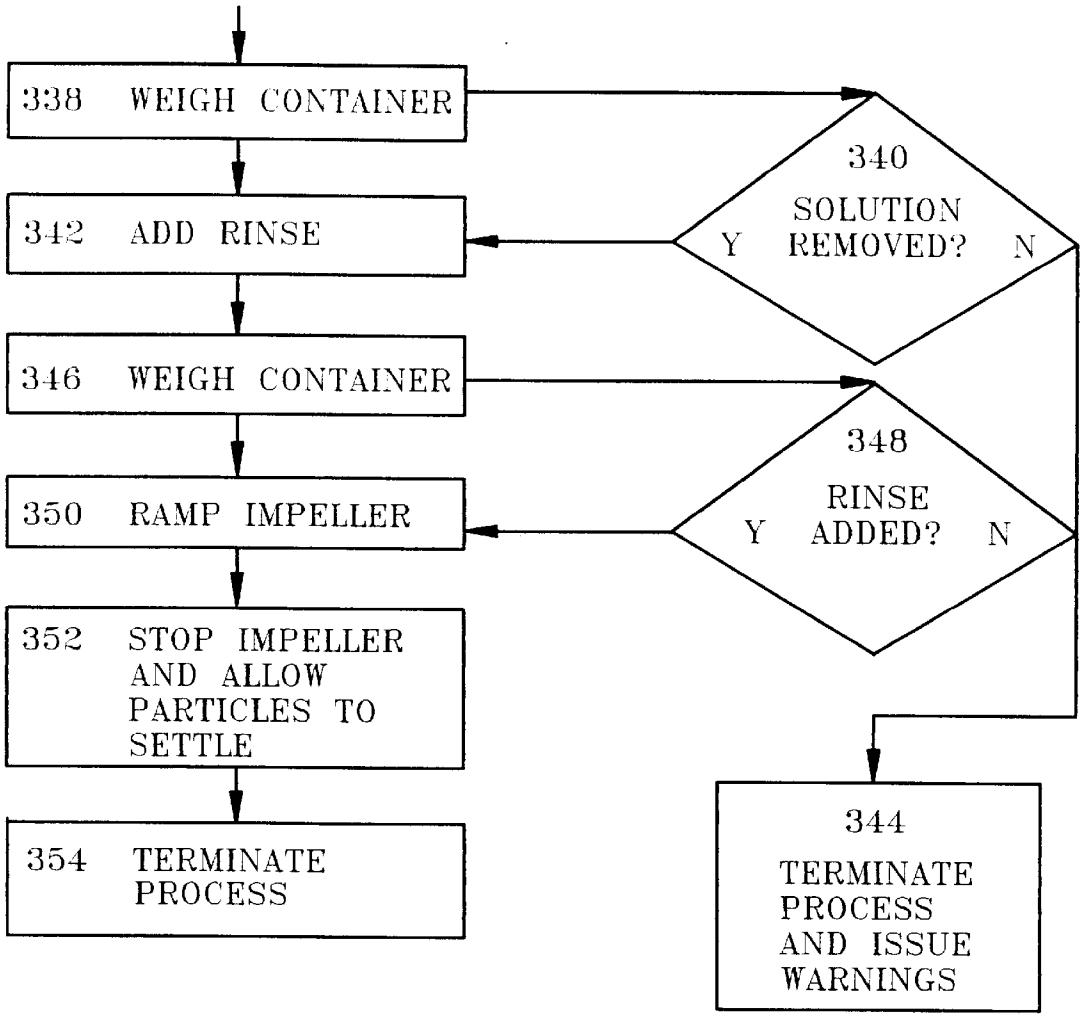
338 WEIGH CONTAINER
342 ADD RINSE
346 WEIGH CONTAINER
350 RAMP IMPELLER
352 STOP IMPELLER AND ALLOW PARTICLES TO SETTLE
354 TERMINATE PROCESS
340 SOLUTION REMOVED?
Y
N
348 RINSE ADDED?
Y
N
344 TERMINATE PROCESS AND ISSUE WARNINGS

FIG. 16A

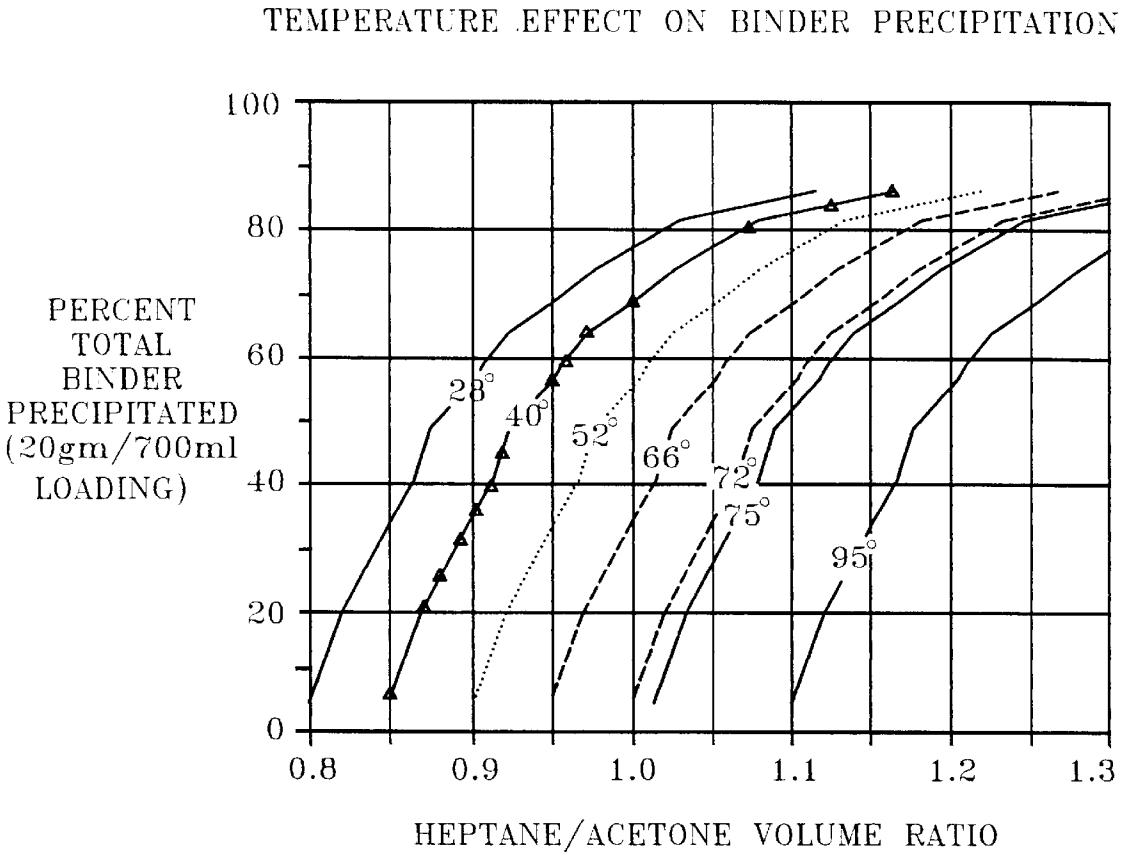
TEMPERATURE EFFECT ON BINDER PRECIPITATION
PERCENT TOTAL BINDER PRECIPITATED (20gm/700ml LOADING)
100
80
60
40
20
0
28°
40°
52°
66°
72°
75°
95°
0.8
0.9
1.0
1.1
1.2
1.3
HEPTANE/ACETONE VOLUME RATIO

FIG. 17

AUTOMATED PROPELLANT BLENDING

ORIGIN OF THE INVENTION

The invention described herein was made in the performance of work under a NASA contract and is subject to the provisions of Section 305 of the National Aeronautics and Space Act of 1958, Public Law 85-568 (72 Stat. 435; 42 U.S.C. 2457).

FIELD OF THE INVENTION

The present invention relates to apparatus and methodology for blending propellant or explosive mixtures of a fuel and an oxidant with a binder.

BACKGROUND OF THE INVENTION

Pyrotechnic compositions are used for may useful purposes. Such compositions are used in the aerospace industry to provide ignition, propulsion, vehicle separation, and emergency egress. The automotive industry also uses ignition and gas production compositions for occupant restraint systems, i.e. airbags. The demand for these pyrotechnic mixtures continues to grow.

A typical pyrotechnic device is the NASA standard initiator (NSI). The NSI is a two-pin electrically activated, electro-explosive device containing zirconium potassium perchlorate (ZPP) propellant. Initially designed and used in 1966 for the Apollo lunar mission, the standard NSI is still used today in the NASA space shuttle system.

The propellant used in the NSI is a composition of finely divided zirconium, potassium perchlorate and graphite held together with a fluoroelastomer polymer as a binder. The mixture, besides being highly reliable, is very sensitive to ignition stimulus, particularly static discharge. The propellant is an extremely fast brisant explosive. These properties make the manufacture and handling of bulk quantities of ZPP very hazardous.

In the automotive industry, inflatable vehicle occupant restraint systems are standard equipment included in millions of new vehicles every year. Although different propellants are sometimes used in automotive applications, the initiators are very similar to the NSI's in that they usually use a ZPP propellant and are generally activated by electrical stimulation. The manufacture of propellants has been an inherently dangerous task owing to the risk of fire or explosion. The pyrotechnics industry has experienced accidents in the manufacture of energetic compositions, particularly with hand blending techniques. Flare and illumination compositions based on metal fuels such as, for example titanium, aluminum, magnesium and the like, exhibit characteristics similar to ZPP.

The performance of an energetic material such as ZPP is dependent on many factors such as purity, particle size distribution, particle shape, surface area, and the like. One of the factors affecting the reproducibility of the performance of a propellant is the degree of mixing, or homogeneity of the blend. A pyrotechnic composition that has been poorly mixed often exhibits slower burn rates and is less dependable than a well-mixed one. Some pyrotechnic compositions make use of a binder system that serves as an adhesive, holding the fuel and oxidant in a well-mixed condition. Without a binder many compositions separate under the influence of gravity or vibration, resulting in performance degradation. Therefore, proper mixing and incorporation of the binder during manufacture are key process parameters.

Heretofore, the blending of the NSI propellant ingredients has been done by hand, typically using a solvent evaporation

procedure. The propellant components were generally poured in the form of dry powders into a 45 degree inclined bowl rotating with a solution of the binder (fluoropolymer in acetone or n-butyl acetate, for example). Manipulating the blend for homogeneity, the solvent was evaporated to leave the binder and obtain a moist solid. The moist solid was then sieved in air through a screen, often by hand. The screened propellant composition was then dried to remove the residual solvent. This process has produced good propellant, but has a number of disadvantages. The solvent evaporation technique relies on manual and frequent movement of the mix during processing to achieve good blends. Thus, the outcome of the blend is very dependent on the skill of the person doing the blending. The solvent evaporation method can also be very dangerous. Fire and explosion have occurred during the solvent evaporation blending process. The operator is in close proximity to the mixing and granulation process, a high risk situation. The evaporation method is also time intensive, requiring several hours per blend.

The preparation of propellants has also been done using a precipitation technique. In this method, the fuel and oxidizer components are suspended in the binder solution by a mechanical mixer and a countersolvent is added while mixing the solution. The countersolvent causes the binder to precipitate from the solvent. As the binder precipitates, the active particles are entrapped in the binder. This process has historically been a manual operation with the operator in close proximity to the mix container, adding the dry components and countersolvent. The timing of process events lacked a degree of repeatability due to the human operator. Previous attempts to use the precipitation methodology for the preparation of propellants resulted in poor repeatability. These blends have suffered from rubbery inclusions, or the formation of clay-like products that require granulation similar to the evaporation process. Fire and explosion have also occurred during the precipitation blending process. These incidents have usually been due to pyrophoric or static discharge ignition of the metal fuel component. The operator has also been at risk in close proximity to the mixing process which involves the use of volatile, flammable solvents, as well as the propellant particles.

From the descriptions above it is evident that the largest factor reducing personnel safety is close proximity to the blending operation. The ability to perform the blending operation from a remote location would greatly increase safety. It would be desirable to have an automated propellant blending system in which the quality and characteristics of the propellant composition are not so dependent upon the skill of the human blending operator. It would also be desirable to speed up production and expand the capacity of propellant manufacturing facilities. It would be further desirable to have available a propellant blending system which avoids the evaporation method and the safety hazards incidental to drying the propellant composition to dryness. It would also be desirable to use a propellant blending process which minimizes the screening requirement and obtains a finer end product than has been available heretofore. Ideally, an automated propellant blending system would be able to produce agglomerated propellant particles having a controlled particle size distribution.

SUMMARY OF THE INVENTION

We have invented an automated propellant blending system using a closely metered addition of a countersolvent to a solution of binder with fuel, oxidant and other particles suspended therein to achieve a precise precipitation rate of the binder during a precipitation cycle. By establishing a

profile of binder precipitation versus the ratio of countersolvent to solvent, for example, using ordinary laboratory equipment to precipitate fixed amounts of binder solution and various countersolvent-solvent ratios and temperatures, a curve and/or computer algorithm can be derived to precisely control countersolvent addition near the cloud point or coacervation point to obtain a controlled rate of precipitation of the binder into the mix. This assures a continuous, predictable release of binder precipitate into the mix container for a controllable transition of the properties of the binder during agglomeration and finishing of the propellant composition particles. The system can include remote, computer-controlled precipitation for safety, reliability and improved product properties.

In one aspect, the present invention provides a method for preparing a solid propellant mixture of oxidant and fuel particles in a binder. The method includes the steps of:

(a) admixing solid particles in a solution of binder;

(b) adding countersolvent to the admixture of step (a) to about a coacervation point while maintaining agitation;

(c) metering countersolvent under controlled conditions of shear into the mixture of step (b) to precipitate the binder and form aggregated particles, wherein the countersolvent metering rate and shear rate are matched to obtain a desired particle size distribution of the aggregated particles;

(d) admixing excess countersolvent into the mixture from step (c), preferably at a higher countersolvent addition rate relative to step (c), while maintaining conditions of shear;

(e) maintaining agitation of the mixture from step (d) for a period of time to allow the binder in the aggregated particles to harden;

(f) rinsing the hardened aggregated particles from step (e) with additional countersolvent.

The method is particularly applicable to the preparation of metal powder/oxidant/polymer propellant blends, especially zirconium-potassium perchlorate propellant blends using a fluorinated elastomer such as a terpolymer of hexafluoropropylene, vinylidene fluoride and tetrafluoroethylene. The method can also be used to coat any particles in general with a polymeric binder. For example, the method can be used to coat metallic particles to inhibit air oxidation during storage.

Steps (a) and (b) preferably include charging a mixing container with the binder solution, fuel particles, optional processing aids such as graphite and a countersolvent preload, mixing the contents of the mixing container, and while maintaining mixing of the mixing container, adding a charge of oxidant particles to the mixing container. The addition of the oxidant particle charge, as well as the countersolvent addition and hardening of the aggregated particles, can be remotely actuated to facilitate personnel safety.

In a preferred embodiment, the method includes empirically determining the coacervation point for the countersolvent-solvent system as a function of temperature. Based on this empirical determination, the countersolvent ratio of the coacervation point relevant to step (b) is estimated. Step (b) preferably includes the sequential steps of adding a preload of countersolvent to avoid coacervation, preferably to within about 20 percent of the countersolvent-solvent ratio at the coacervation point, allowing the admixture to thermally equilibrate, measuring the temperature of the admixture, calculating the countersolvent-solvent ratio needed for coacervation at the measured temperature, and adding additional countersolvent to the mixture to make the calculated ratio of countersolvent to solvent.

The countersolvent metering ratio in step (c) is different from a ratio of countersolvent addition in step (b), typically slower in step (c) relative to step (b) to avoid precipitating the binder too quickly. In step (c), the countersolvent metering can be stopped and shearing of the mixture maintained for a period of time effective to aggregate the particles to the desired particle size distribution while the particles have a tendency to stick together, prior to adding the excess countersolvent and hardening the aggregated particles in steps (d) and (e).

The rinsing step (f) can desirably include stopping agitation of the mixture and allowing the aggregated particles to settle, decanting supernatant, and adding additional countersolvent.

In another aspect, the present invention provides apparatus for manufacturing a solid propellant mixture of oxidant and fuel particles in a binder. The apparatus includes a mixing container, a variable-speed impeller, a countersolvent supply system, a decanting line and a control system. The impeller is provided for agitating a mixture of binder, solvent and solid particles in the mixing container. The countersolvent supply system is provided for adding countersolvent into the mixing container. The decanting line is provided for removing supernatant liquid from the mixing container. The control system is capable of adjusting the speed of the impeller, adjusting the rate of countersolvent addition and actuating liquid removal from the mixing container through the decanting line. The control system preferably includes a countersolvent metering routine for effecting the steps of: (1) adding the countersolvent to the mixing container with operation of the mixing impeller up to about a coacervation point, (2) at about the coacervation point, matching the countersolvent addition rate and impeller speed to obtain a desired particle size distribution of the particles aggregated with the binder, and (3) thereafter adding excess countersolvent to the mixing container, preferably by increasing the countersolvent addition rate. The control system also preferably includes a liquid removal routine for stopping the impeller, allowing particles to settle in the mixing container and actuating a valve in the decanting line to remove supernatant liquid from the mixing container.

The countersolvent supply system preferably includes relatively high and low countersolvent flow modes. In one embodiment, the countersolvent supply system includes first and second parallel flow paths. The first flow path is sized for a relatively rapid flow of countersolvent relative to a flow resistance of the second path. The second path is generally used for the countersolvent addition during step (2) in the countersolvent metering routine. In an alternate embodiment, a single valve in a flow path is operable for the high countersolvent flow mode in a continuously open position, and capable of being pulsed open and closed at a frequency selected to provide a desired low countersolvent flow mode rate.

The apparatus preferably includes a weight sensor for measuring changes in the weight of the mixing container. The liquid removal routine can include a comparison of the mixing container weight before and after actuation of the valve to confirm removal of the supernatant liquid. The control system preferably includes a final countersolvent addition routine for adding additional countersolvent to the mixing container after execution of the liquid removal routine, comparing the mixing container weight before and after the additional countersolvent addition to confirm the

countersolvent addition, and stirring the mixing container with the impeller.

The apparatus also preferably includes a temperature sensor such as a thermocouple for measuring the temperature of the mixing container. Step (1) of the countersolvent metering routine can include adding a preload of countersolvent to within about 20 percent of the coacervation point, measuring the temperature of the mixing container, calculating the countersolvent-solvent ratio of the coacervation point at the measured temperature, and adding additional countersolvent to the mixing container to make the calculated ratio of countersolvent to solvent.

The apparatus can also include a dump mechanism which is remotely actuatable to add a supplemental charge of particles to the mixing container, for example, oxidant particles. The countersolvent supply system preferably includes a tank including a charge of countersolvent. The apparatus can also include a charge of fuel particles in a binder solution in the mixing container. Preferably the fuel is zirconium, the oxidant is potassium perchlorate and the binder is fluoroelastomer.

BRIEF DESCRIPTION OF THE DRAWINGS

FIG. **1** is an exploded view of an embodiment of the propellant blending system according to the present invention.

FIG. **2** is a perspective front view of the blending system of FIG. **1**.

FIG. **2**A is a perspective rear view of the blending system of FIG. **2**.

FIG. **3** is an enlarged perspective front view, with the container assembly partially cut away to show the dump mechanism, of a portion of the blending system of FIG. **2**.

FIGS. **4**A and **4**B are perspective front and rear views, respectively, of the chassis assembly of the propellant blending system of FIG. **1**.

FIG. **5** is a perspective view of the platform assembly of the propellant blending system of FIG. **1**

FIG. **6** is a perspective view of the container assembly of the propellant blending system of FIG. **1**.

FIG. **7** is a perspective view of the motor assembly of the propellant blending system of FIG. **1**.

FIG. **8** is a perspective view of the container assembly, cut away to show the impeller, dip tube, liquid level and settled particles in the propellant blending process using the apparatus of FIG. **1**.

FIG. **9** is a perspective view of the dump mechanism of the propellant blending system of FIG. **1**, shown in the open position.

FIG. **9**A is an enlarged detail of the dump mechanism of FIG. **9**.

FIG. **10** is a perspective view of the receptacle assembly of the dump mechanism of FIG. **9**, shown in the closed position.

FIG. **11** is an exploded view of the dump mechanism of FIG. **9**.

FIG. **12** is a perspective view of the countersolvent supply system of the propellant blending system of FIG. **1**.

FIG. **13** is a schematic diagram showing alternative countersolvent supply methods for the propellant blending system of the present invention.

FIG. **14** is a flow schematic of the propellant blending system of FIG. **1**.

FIG. **15** is a schematic diagram of a control system for the propellant blending system of FIG. **1**.

FIG. **16** is a typical propellant blending process software flowchart according to an embodiment of the invention.

FIG. **17** is a graph of Viton B fluoropolymer precipitation from acetone using heptane versus countersolvent-solvent ratio at various temperatures at a loading of 20 g/700 ml.

FIG. **18** is a graph of the coacervation point of the countersolvent-solvent ratio of Viton B fluoropolymer in acetone and heptane at a loading of 20 g/700 ml.

DETAILED DESCRIPTION

With reference to the accompanying drawings wherein like numerals are used to designate like parts, in one embodiment taking advantage of the principles of the present invention, a propellant blending system is provided in the form of a generally self-contained chassis assembly **10** on which are mounted container assembly **12**, platform assembly **14**, motor assembly **16**, dump mechanism **18**, countersolvent supply system **20** and dip tube **22**. Chassis assembly **10** (see FIGS. **4**A and **4**B) includes a horizontal base **24**, vertical partition **26** and opposite side-wall supports **27**. The components of the propellant blending system are generally mounted on the vertical partition **26**, as will be described in more detail below, with appropriate connections for the supply of electricity, instrument air, nitrogen, countersolvent and the like as necessary. Vertical slots **28**A,**28**B and **28**C with enlarged lower ends **29**A,**29**B,**29**C are formed in the partition **26** for receiving respective lugs **30**A, **30**B and **30**C on container assembly **12** (see FIG. **6**) for vertically positioning the container assembly **12**.

As best seen in FIG. **5**, the platform assembly **14** includes a hinged arm **36** secured to the partition **26** by means of bracket **38**. The arm **36** is fixed vertically and swings in a horizontal direction to position a support **40** secured at an outer end thereof underneath the container assembly **12** (see FIG. **2**). A spring-biased pin assembly **41** mounted in the bracket **38** has a pin **42** receivable in a bore **43** formed in the arm **36** for locking the arm **36** in position to support the container assembly **12**. The support **40** can include a load cell **44** for measuring the weight of the container assembly **12** and the contents thereof. Thus, the container assembly **12** is supported on the support **40** for operation of the propellant blending system, but can be removed by removing the pin **42** from the bore **43** and pivoting the arm **36** outwardly to remove the support **40** to allow the container assembly **12** to be moved downwardly by sliding the lugs **30**A,**30**B,**30**C in the respective slots **28**A,**28**B and **28**C.

As best seen in FIG. **6**, the container assembly **12** is generally cylindrical with an open top and provided with a handle **46** on one side thereof. On the opposite side, a mounting armature is affixed and includes a generally vertical plate **48** to which the lugs **30**A,**30**B,**30**C are mounted. The lugs **30**A,**30**B,**30**C generally include a base **50** welded or bolted to the vertical plate **48**, axle **52** extending outwardly therefrom, and terminating with an enlarged head **54**. The lugs **30**A,**30**B,**30**C are generally spaced apart laterally to correspond with the spacing between the slots **28**A,**28**B, **28**C, and at least one of the lugs is preferably offset vertically, as lug **30**B, for example. The lugs **30**A,**30**B,**30**C are generally arranged so that the pattern thereof corresponds with the pattern of the open ends **29**A,**29**B,**29**C of the slots **28**A,**28**B,**28**C. The axles **52** have a diameter or width which is less than that of the corresponding slots **28**A,**28**B, **28**C. Each head **54** has a diameter which is larger than the respective slot **28**A,**28**B,**28**C, but smaller than the enlarged ends **29**A,**29**B,**29**C.

As best seen in FIG. **7**, the motor assembly **16** includes a motor **56** which can be mounted to the partition **26** (FIG. **2**)

by means of bracket **58**. For use with flammable solvents and/or reactive particles, the motor **56** should be explosion proof. A shaft **60** depends from the motor and has a propeller **62** attached at a lower end thereof. As seen in FIG. **8**, the motor assembly **16** is mounted on the partition **26** so that it is positioned to stir the contents of the container assembly **12**. The countersolvent dip tube **22** passes horizontally through the partition **26** and downwardly for sufficient length to terminate above a bottom of the container assembly **12**. The dip tube **22** is desirably shaped to function as a baffle in the mixing container **12**, for example, with blades **64** extending laterally on either side thereof. The dip tube **22** preferably terminates at cap **66** provided with radially spaced slots **68** to minimize mixing between the contents of the container assembly **12** and countersolvent inside the dip tube **22**. If desired, thermocouple **70** can be affixed to the dip tube **22**, preferably on one of the blades **64**.

The dump mechanism **18** mounts adjacent the container assembly **12** for adding the oxidant particles thereto by remote actuation. As shown in FIG. **9**, the dump mechanism **18** includes receptacle assembly **70** and actuation lever **72**. The receptacle assembly **70** includes chute **74** affixed on one side to mounting plate **76** and spaced therefrom, and spring-biased mounting pins **78** which pass through respective bores (not shown) formed in the mounting plate and extend from an opposite side of the mounting plate **76** for attachment to the partition **26**. The receptacle assembly **70** is detachable from the chassis assembly **10** and actuation lever **72** for charging with oxidant particles, for example. While detached, a retaining clip **81** is used to hold a lower gate **80** in a closed position as seen in FIG. **11**. The lower gate **80** is hingedly connected at **79** to a lower end of the mounting plate **76** for selectively opening and closing a bottom of the chute **74**. The receptacle assembly **70** is removably attached to the partition **26** by means of the mounting pins **78** and keeper **83**. The keeper **83** is engaged in transverse bore **85** formed near an end of the mounting pins **78** between the mounting plate **76** and chute **74** (see FIGS. **10** and **11**). The gate **80** has a lateral pin **82** and clip **84** rotatably secured thereto for removable attachment to the actuation lever **72**.

The actuation lever **72** includes a cylinder **86** housing a pneumatically operable piston (not shown) connected to a shaft **88**. The cylinder **86** has a proximal end rotatably secured to the partition **26** via bracket **90**. The shaft **88** has distal end **92** with a transverse bore **85** (see FIG. 9A) for slideably and rotatably receiving lateral pin **82**. The distal end **92** has a profile adapted to be received in the clip **84**.

As seen in FIG. 2A, the countersolvent supply system **20** is mounted on the reverse side of the partition **26**. As shown in FIG. **12**, the countersolvent supply system **20** includes a tank **96** connected to a cross **98**. One port in the cross **98** is available for re-supplying countersolvent to the tank **96**. A line **100** supplies nitrogen or other inert gas from pressure regulator **101** to the top of the tank **96** at cross **98**. A sightglass **102** or other level indicator, is provided by connection at upper and lower ends of the tank **96**, for example, via cross **98** and tee **104**.

Countersolvent is supplied to the dip tube **22** from tank **96**, through tee **104**, line **106**, hand valve **108**, solenoid valve **110**, gravity leg **112** and decant/supply line **114**. The pressure regulator **101** maintains a uniform pressure in the tank **96**. Hand valve **108** has an adjustable orifice to establish a maximum countersolvent flow rate. The solenoid valve **110** is capable of continuous operation to supply the countersolvent at the maximum flow rate limited by the setting of the hand valve **108**, and can also be pulsed at different duty cycles to deliver countersolvent at a lower, precisely controlled flow rate. A suitable solenoid valve **110** is commercially available, for example, a ½-inch Marrotta solenoid valve.

The gravity leg **112** is connected to a decant valve **116** positioned at a low point relative to the bottom of the dip tube **22** to establish a siphon from the container assembly **12** into waste line **118**. The decant/supply line **114** extends upwardly from the gravity leg **112** adjacent the decant valve **116** and passes through the partition **26** at fitting **120** to connect to the dip tube **22** on the opposite side thereof. During countersolvent delivery, the decant valve **116** is closed. The valve **116** is opened pneumatically when it is desired to decant liquid from the container assembly **12**.

With reference to FIG. **13**, some examples of alternate countersolvent supply and flow metering embodiments are schematically indicated. In the apparatus just described for the pressure method, a regulated pressure source N pads a countersolvent tank T equipped with a fill port P. In an example of a pump method as one example of an alternate embodiment, a pump G provides countersolvent from tank T' equipped with fill port P' at a constant pressure established by back relief valve V1 which returns excess countersolvent to the tank T'.

Similarly, flow metering system M can use the single valve method described above, employing solenoid valve **110** in closed position (no flow), continuously open (maximum flow) or in a pulsed operation (low, metered flow). As described above, the hand valve **108** functions as an adjustable flow limiter. In an example of a two valve method as one example of an alternate flow metering embodiment, a parallel arrangement of continuously open or closed solenoid valves S1 and S2 can be used to establish high and low countersolvent flow paths. The flow rates can be established by the trim in valve S1, for example, and/or by using an orifice plate or hand valve V2 to set fixed or adjustable flow rates. Similarly, a pump (not shown) could be used in place of decant valve **116**, particularly where the line **118** is not below the liquid level in the mixing container **12** as is need to establish a siphon.

As best seen in FIG. **4A** an inert gas-purged cabinet **120** can be mounted on the reverse side of the partition **26** to house the operating electronics, such as a control module (not shown) and any electrically operated valves such as solenoid valve **110**. The cabinet **120** can also house electrically operated pneumatic valve **122** and vent valve **124** (see FIG. **14**). An electric umbilical **126** can pass into the cabinet **120** via fitting **128** mounted in side wall **28**.

An example of a suitable nitrogen supply system is illustrated schematically in FIG. **14**. A high pressure nitrogen source **130**, for example, a 100 psig nitrogen tank, supplies nitrogen to lines **100**,**132** and **134**. Line **100** includes regulator **101** mentioned above, upstream pressure relief valve **136**, downstream pressure relief valve **138** and check valve **140**. Regulator **101** can be hand adjustable to provide the desired pressure to tank **96**, say on the order of 20 psig, for example. Relief valves **136** and **138** are designed to relieve overpressure conditions, for example, 120 psig and 25 psig, respectively, depending on system design parameters. The line **132** supplies nitrogen to actuator **142** for pneumatically operating decant valve **116**.

The line **134** supplies nitrogen to regulator **144** to establish a nitrogen pressure suitable for purging the cabinet **120**, for example, 50 psig. A downstream relief valve **145** protects against overpressure, for example, above 60 psig. A line **146** supplies nitrogen to orifice **148** to continuously purge the cabinet **120**, and to valve **122** for actuation of the cylinder

72 to open and close the lower gate **80** in the dump mechanism **18**. Another orifice **150** supplies nitrogen to purge an enclosure **152** for the load cell **44**.

The propellant blending system of FIGS. **1–14** can be operated remotely by operator and/or computer control. An exemplary control system schematic illustrated in FIG. **15** includes a control system housing **200** which can be located a remote distance from the apparatus of FIGS. **1–14** to provide operator safety. Electrical connection between the control system housing **200** is provided via the umbilical **128**. The housing **200** is electrically connected to a ground **202** and is supplied with power, for example, 115 volts alternating current at input **204**. The input **204** supplies power to an auxiliary power receptacle **206**, motor driver/controller assembly **208** and power supplies **210**, **212** and **214**. The auxiliary power receptacle **206** can be mounted in a plate in the front or back of the housing **200** to use as an outlet for associated equipment, such as, for example, computer **226** and/or video monitor. Power supply **210** provides 24 volt direct current power to signal conditioners **216** and **218** which receive inputs from thermocouple **70** and load cell **44**, respectively.Power supplies **212** and **214** supply 5 volt and 24 volt direct current power, respectively, to valve driver assembly **220**. The motor driver/controller assembly **208**, valve driver assembly **220**, signal conditioners **216** and **218** and a key switch **222** are connected to computer **226** via junction block **224**. The motor driver/controller assembly **208** can be selected between local and remote operational modes by means of selection switch **228** mounted on a front panel of the housing **200**. In local operating mode, the speed of the motor **56** is controlled by the motor driver/controller assembly **208** via local speed controller **230** which is similarly mounted in a panel of the housing **200** adjacent to the selection switch **228**. The valve driver assembly **220** provides output for operating dump mechanism actuator valve **122**, dump mechanism vent valve **124**, solenoid valve **110** and decant valve **116**. Signal conditioners **216** and **218** provide input to the computer for the thermocouple **70** and load cell **44**. The key switch **222** provides input to the computer **226** to indicate safe or armed status.

In operation of the propellant blending system of FIGS. **1–15**, a solution of the binder and the fuel particles are placed in the container assembly **12**. A premeasured quantity of oxidant particles is deposited in the chute **70** of dump mechanism **18**. The tank **96** is filled with countersolvent as necessary and padded with nitrogen via line **100**. The pivoting arm **36** is moved outwardly and the container assembly **12** is positioned to align the lugs **30**A,**30**B,**30**C in the respective enlarged ends **29**A,**29**B,**29**C. The container assembly **12** is then moved upwardly with the lugs **30**A, **30**B,**30**C engaged in the slots **28**A,**28**B,**28**C, the pivoting arm **36** moved in to place the support **40** below the container assembly **12**, and the container **12** positioned thereon. The motor **56** is started to mix the contents of the container assembly **12**. A countersolvent preload is added to the container assembly **12** by opening valve **110**. Countersolvent passes through gravity leg **112**, supply/decant line **114** and tube **22** into the container assembly **22**, while maintaining agitation.

After the countersolvent preload is placed in the container assembly **12**, the oxidant particles are dumped from the dump mechanism **18** into the container assembly **12**, while maintaining agitation. Opening and closing the lower gate **80** several times helps to dislodge residual particles into the container assembly **12**. The countersolvent is then metered into the container assembly **12** by opening or pulsing the metering valve **110** to supply countersolvent at a predetermined rate through the gravity leg **112**, decant/supply line **114** and dip tube **22**. When sufficient countersolvent has been metered into the container assembly **12**, agitation can be continued for a period of time to allow the particle aggregates to increase in size. Then, while maintaining agitation, the valve **110** is opened to supply excess countersolvent. While maintaining agitation, the contents of the container assembly **12** are stirred for a sufficient period of time to allow the aggregated particles to harden. The agitation is then stopped, and the particles allowed to settle to the bottom of the container assembly **22** as seen in FIG. **8**.

Then the decant valve **116** is opened and the supernatant siphons from the container assembly **12** through the dip tube **22** and decant/supply line **114**, out through gravity leg **112** and valve **116**. When the liquid level in the container assembly **12** falls below the lower end of the dip tube **22** the siphon is broken by vapor. The valve **116** is then closed, and an additional countersolvent wash introduced via valve **110**, gravity leg **112**, decant/supply line **114** and dip tube **22**. After checking the weight of the container assembly **12** via the load cell **44** to ascertain countersolvent addition, the motor **56** can be turned back on to mix the contents of the container assembly **12**. The container assembly **12** is then removed, the propellant composition is screened in the countersolvent, and the recovered propellant particles dried in a vacuum oven.

A typical process flowchart of software for blending propellant compositions using the apparatus of FIGS. **1–15** is illustrated in FIG. **16**. The operator manually loads the binder solution and fuel components into the container assembly, and the oxidizer components into the powder dump mechanism. The operator sets the key switch in the armed position, and starts the software. In the initial logic block **300**, the computer algorithm verifies that all valves are in the off position. In block **302**, the algorithm checks to ascertain that the motor controller is in the remote operating mode. In block **304**, the key switch is monitored for status in the safe or armed position. The status of the key switch can be checked, for example, every 55 milliseconds to make that it remains in the armed position throughout the propellant blending process. If the key switch is turned to the safe position, the process is automatically terminated and text and audible warnings can be issued.

In block **306** the impeller is ramped to mixing speed, for example 1000 rpm. In block **308**, the countersolvent preload is added. This is a predetermined quantity, translated into a period of time that the valve **110** is maintained in the continuously open position. In block **310**, the agitation is continued for a period of time after the countersolvent preload is added to insure proper mixing before coacervation is initiated. A time period of 20 seconds is typical. In block **312**, the impeller speed is adjusted, for example, increased from a typical 1000 rpm preload mixing speed to 1200 rpm. The speed of the motor **56** is then allowed to stabilize for a period of time, for example, 5 seconds, in block **314**. Then, in block **316**, the oxidant particles are added by actuating the dump mechanism **18**, preferably several times to shake loose any oxidant particles which may cling to the surfaces of the chute **74** and lower gate **80**. The mixture is then agitated for a period of time, in block **318**, for example, about 30 seconds, to insure thorough dispersion of the oxidant particles in the binder solution.

In block **320**, the countersolvent-solvent ratio is brought up to initiate coacervation. Using the input from the thermocouple **70**, the solution temperature is measured. Based on the temperature measurement, the computer algorithm calculates the cloud point based on data specific for the

binder-solvent-countersolvent system. Based on the calculated cloud point, the countersolvent is added by continuously opening, or preferably pulsing, the valve **110**. Once the countersolvent-solvent ratio of the cloud point is reached, the algorithm proceeds with block **344** to meter additional countersolvent into the container assembly **12** to a predetermined countersolvent-solvent ratio to precipitate a desired quantity of the binder from the solution. A countersolvent-solvent ratio of about 1.4 is typical in the heptane-acetone system with Viton B fluoropolymer in the preparation of ZPP propellant. Next, proceeding to block **324**, the contents of the container assembly **12**, are continuously mixed for a period of time to build aggregated particle size. A time period of 30 seconds is typical, although longer times can be used for obtaining larger particle aggregates. Then, in block **326**, additional countersolvent is added, preferably by operating the valve **110** in a continuously open position, to achieve a predetermined countersolvent-solvent ratio, typically about 3.0 for the heptane-acetone system using Viton B fluoropolymer as the binder. The impeller speed can then be reduced in block **328** to minimize particle disaggregation which could result from excessive shear. In block **330**, the mixing is continued for a period of time to allow the particles to finish hardening, typically on the order of 60 seconds. Proceeding next to block **332**, the impeller is stopped and the particles are allowed to settle. The time required for settling depends on the specific components of the system, but a time period of about 10 seconds is typical. In block **334**, the weight of the container measured by the load cell **44** is stored. The supernatant is siphoned next in block **336** by opening the decant valve **116**. After allowing a sufficient period of time for the liquid to drain, in block **338**, the load cell **44** reading of the weight of the container assembly **12** is taken and compared in block **340** with the weight stored in block **334**. If the supernatant drained, additional countersolvent is added in block **342**. If not, the software proceeds to block **344**, terminating the process and issuing warnings.

After adding the countersolvent rinse in block **342**, typically 1 liter, another load cell **44** reading is taken in block **346**, and compared in block **348** with the reading stored in block **338**. If the countersolvent added properly the software proceeds to block **350**. If not, the software proceeds to termination/alarm block **344**.

In block **350**, the motor **56** is ramped to 1200 rpm, for example, for a relatively short time period, such as 10 seconds, to dislodge the settled particles, and then the speed is reduced to 1000 rpm, for example, for a longer period of time, e.g. 60 seconds, to thoroughly rinse the particles. Then in block **352**, the motor **56** is stopped and the particles are again allowed to settle. Finally, the software terminates the process in block **354**, turning all valves and outputs off, sounding an audible process end alarm, enforcing safe key operation and cycling the software for the next run. The operator can then remove the container assembly **12** for further processing of the propellant product as described above.

The amount of countersolvent preload, countersolvent-solvent ratio at the coacervation point and the countersolvent-solvent ratio to achieve suitable binder viscosity in logic block **322** (FIG. **16**), is based on data specific for the particular binder, solvent, binder loading and countersolvent. Thus, the data must be obtained for the binder, solvent and countersolvent which will be used in the propellant blending process, at the binder concentration that will be used. The data are developed as a set of curves which plot the percentage of binder precipitated as a function of the countersolvent-solvent volume ratio, over a range of temperatures likely to be observed during the blending process. A typical data matrix is illustrated graphically in FIG. **17** of the heptane-acetone system using Viton B fluoropolymer as the binder. The countersolvent preload is determined from this data to be about the most countersolvent which can be added without precipitating binder at the lowest temperature to be expected, taking into account ambient blending conditions as well as cooling resulting from any endothermic mixing of the solvent and countersolvent. For the heptane-acetone system of FIG. **17**, the ratio is about 0.8.

From the data for the specific countersolvent-solvent-binder system, and empirical relationship between countersolvent-solvent ratio and coacervation temperature can be established as illustrated in FIG. **18**. For use in the algorithm in logic block **320** of FIG. **16**, it is useful to develop the relationship in the form an equation to calculate the countersolvent-solvent cloud point volume ratio as a function of the measured temperature.

For the countersolvent-solvent ratio used in logic block **322**, it is desired to use the lowest ratio possible to precipitate about 50–90 percent of the binder, preferably 70–85 percent of the binder. If too much binder is precipitated too quickly, excessively large particles will form to an undesirable degree. If too little binder is precipitated, it is difficult to grow aggregated particle size properly.

EXAMPLE 1

The cloud point as a function of temperature and binder loading was determined empirically for Viton B fluoropolymer in acetone using heptane as the countersolvent. The data were obtained by adding heptane to a Viton B-acetone solution maintained in a temperature-controlled bath and recording the heptane-acetone volume ratio at the visually observed cloud point. The data are presented in Table 1.

TABLE 1

Viton B Loading (wt % in acetone)	Temperature (°F.)	Cloud Point (heptane/acetone ratio)
20 g/700 ml	28	0.77
	52	0.88
	68	0.94
	72	0.98
	75	1.00
	95	1.08

From these data, the cloud point was curve fit to the following equation:

$$R_{CP}=0.637+0.0047T$$

wherein R_{CP} is the heptane/acetone volume ratio at the cloud point, T is the temperature in °F. Data for this Viton B-heptane-acetone system are presented graphically in FIGS. **17** and **18**. It is noted that these data were developed for Viton B having Mw of 500,000 and polydispersity (Mw/Mn) of 2.3, and would be different for different grades of Viton B depending on Mw, Mw/Mn, monomer composition, and other characteristics.

EXAMPLE 2

The apparatus of FIGS. **1–16** was used to prepare a simulated propellant. Tin powder (sp. gr.=7.31) was screened through a 325 mesh screen to simulate zirconium (sp. gr. 6.53). Sodium sulfate (sp. gr. 2.68) was screened through a 100 mesh screen to simulate potassium perchlo-

rate (sp. gr. 2.52). The binder was Viton B fluoropolymer (Mw=500,000; Mw/Mn=2.30), the solvent was acetone and the countersolvent was heptane as in Example 1.

The mixing container was a 6-inch ID vessel equipped with a one-inch vertical baffle and a baffle gap of ¼ inch. The impeller was a 3-inch diameter axial flow impeller with rounded blades mounted on a vertical shaft positioned about one inch above the bottom of the mixing container and about ½-inch horizontally from the wall of the mixing container opposite the baffle, i.e. about 1 inch off center.

A solution of 20 g of Viton B fluoropolymer in 700 ml of acetone was charged to the mixing container with 208 g of the tin powder. The motor was ramped to 800 rpm and 595 ml of heptane was added. Agitation at 800 rpm was maintained for 20 seconds, and then increased to 1200 rpm. The sodium sulfate (168 g) was added while maintaining the impeller at 1200 rpm. After 30 seconds, the temperature was measured to be 65° F. and the cloud point determined from the equation of Example 1 to be a heptane/acetone ratio of 0.94. Additional heptane (63 ml) was added to reach the cloud point. While maintaining the impeller at 1200 rpm, 140 ml more of heptane was pulsed into the mixing container over a 15 second time period by rapidly opening and closing a ½-inch Marrotta solenoid-operated valve, and the mixture stirred for 30 seconds. Then, 1302 ml of heptane were immediately added (90 ml/second) while maintaining the impeller at 1200 rpm. Stirring at 1200 rpm was continued for an additional 60 seconds after the heptane/acetone ratio was brought to 3.0.

The impeller was then stopped and the particles allowed to settle to the bottom of the mixing container. The siphon valve was opened to drain liquid until a vapor break occurred, corresponding to a liquid level about ½-inch above the settled particles. Removal of the liquid was confirmed by load cell readings. Then 1000 ml of heptane were added, the heptane addition confirmed by load cell readings, the container stirred at 1200 rpm for 60 seconds. The impeller was then turned off and the container removed.

The particles from the container were wet screened on a 20 mesh screen to remove oversized particles (about 5 g). The product was spread thinly on a tray and dried overnight in an oven at 140° F. The recovered particles were screened and had the particle size distribution shown in Table 2. The repetition of the above procedure obtained reproducible results.

TABLE 2

Screen Size (mesh)	Particle Size (microns)	Weight Percent Retained on Screen
30	595	0.8
40	420	1.3
50	297	2.1
60	250	11.3
80	177	68.6
100	149	15.3
200	74	0.5

EXAMPLE 3

The procedure of Examples 1 and 2 is followed to prepare a ZPP propellant for use in a NASA standard initiator (NSI). The NSI propellant is prepared with 52 weight percent zirconium, 42 weight percent potassium perchlorate, 5 weight percent Viton B fluoropolymer and 1 weight percent graphite. The zirconium specification is Mil-Z-399D, Type II, Class II with a maximum hafnium content of 3 percent without ball milling to the final size. The potassium perchlorate is Mil-P-217, Grade A, Class 4 again with no ball milling to the final size. The Viton B fluoropolymer follows Dupont Sales Specification No. 14, 1985-02-06. The graphite is specified as Mil-G-155, Grade III, with a particle size less than 1 micron.

A solution of 20 g of Viton B fluoroelastomer in 700 ml of acetone is charged to the mixing container with 208 g of the zirconium powder and graphite. The impeller is brought to 1200 rpm and 595 ml of heptane preload are added. Agitation at 1200 rpm is maintained for 20 seconds and then the potassium perchlorate (168 g) is added while maintaining the impeller at 1200 rpm. After 30 seconds, the temperature is measured to be 65° and the cloud point is determined from the equation of Example 1 to be a heptane/acetone ratio of 0.94. Additional heptane (63 ml) is added to reach the cloud point. While maintaining the impeller at 1200 rpm, 322 ml more of heptane is pulsed into the mixing container over a 35 second time period by rapidly opening and closing a ½ inch Marrotta solenoid valve. The mixture is then stirred for 360 seconds. Then 1120 ml of heptane are immediately added (90 ml/second) while maintaining the impeller rate at 1200 rpm. Stirring at 1200 rpm is continued for an additional 60 seconds after the heptane/acetone ratio is brought to 3.0.

The impeller is then stopped and the particles allowed to settle to the bottom of the mix container. The siphon valve is opened to drain liquid until a vapor break occurs corresponding to a liquid level about ½ inch above the settled particles. Removal of the liquid is confirmed by load cell readings. Then 1000 ml of heptane are added, the heptane addition confirmed by load cell readings, the container stirred at 1200 rpm for 3 seconds, and then reduced to 1000 rpm for 60 seconds. The impeller is then turned off and the container removed.

The particles from the container are wet screened on 30 mesh screen to remove oversized particles (<1 gram). The product is spread thinly on a tray and dried overnight in an oven at 140° F. The ZPP product has a caloric content ranging from 1340 to 1450 calories per gram.

We claim:

1. Apparatus for manufacturing a solid propellant mixture of oxidant and fuel particles in a binder, comprising:

a mixing container;

a variable-speed impeller for agitating a mixture of binder, solvent and solid particles in the mixing container;

a countersolvent supply system for adding countersolvent to the mixing container;

a decanting line for removing supernatant liquid from the mixing container;

a control system for adjusting the speed of the impeller, adjusting the rate of countersolvent addition and actuating liquid removal from the mixing container, said control system including: (a) a countersolvent metering routine for effecting the steps of (1) adding the countersolvent to the mixing container with operation of the impeller up to about a coacervation point, (2) at about the coacervation point, matching the countersolvent addition rate and impeller speed to obtain a desired particle size distribution of the particles aggregated with the binder, and (3) thereafter adding excess countersolvent to the mixing container; and (b) a liquid removal routine for stopping the impeller, allowing particles to settle in the mixing container and actuating a valve in the decanting line to remove supernatant liquid from the mixing container.

2. The apparatus of claim 1 wherein the countersolvent supply system includes a first and second countersolvent supply modes wherein the first mode has a low countersolvent flow rate relative to a high countersolvent flow rate of the second mode.

3. The apparatus of claim 2 wherein the countersolvent supply system includes a first flow path for delivering countersolvent to the mixing container at the relatively low flow rate of the first countersolvent supply mode, and a second countersolvent flow path in parallel with the first flow path for delivering countersolvent to the mixing container at the relatively high flow rate of the second countersolvent supply mode.

4. The apparatus of claim 2 wherein the countersolvent supply system includes a valve in a countersolvent flow path operable in a continuously open mode delivering countersolvent to the mixing container at the relatively high flow rate of the second countersolvent supply mode, and operable in a pulsed open and closed mode at a frequency selected to provide the relatively low flow rate of the first countersolvent supply mode.

5. The apparatus of claim 1 including a weight sensor for measuring changes in the weight of the mixing container.

6. The apparatus of claim 5 wherein the liquid removal routine includes a comparison of the mixing container weight before and after actuation of the valve to confirm removal of the supernatant liquid.

7. The apparatus of claim 1 wherein the control system includes a final countersolvent addition routine for adding additional countersolvent to the mixing container after execution of the liquid removal routine, comparing the mixing container weight before and after the additional countersolvent addition to confirm the countersolvent addition, and stirring the mixing container with the impeller.

8. The apparatus of claim 1 including a temperature sensor for measuring the temperature of the mixing container.

9. The apparatus of claim 8 wherein step (1) of the countersolvent metering routine includes adding a preload of countersolvent to within about 20 percent of the coacervation point, measuring the temperature of the mixing container, calculating the countersolvent-solvent ratio of the coacervation point at the measured temperature and adding additional countersolvent to the mixing container to make the calculated ratio of countersolvent to solvent.

10. The apparatus of claim 1 further comprising a dump mechanism remotely actuatable to add a supplemental charge of particles to the mixing container.

11. The apparatus of claim 10 wherein the supplemental charge comprises oxidant particles, the countersolvent supply system includes a tank including a charge of countersolvent, and further comprising a charge of fuel particles in a binder solution in the mixing container.

12. The apparatus of claim 11 wherein the fuel comprises zirconium, the oxidant comprises potassium perchlorate, and the binder comprises fluoroelastomer.

* * * * *