US008353209B1

(12) **United States Patent**
Zimmerli

(10) **Patent No.: US 8,353,209 B1**
(45) **Date of Patent: Jan. 15, 2013**

(54) **RADIO FREQUENCY TANK EIGENMODE SENSOR FOR PROPELLANT QUANTITY GAUGING**

(75) Inventor: **Gregory A. Zimmerli**, Brunswick, OH (US)

(73) Assignee: **United States of America as represented by the Administrator of National Aeronautics and Space Administration**, Washington, DC (US)

(*) Notice: Subject to any disclaimer, the term of this patent is extended or adjusted under 35 U.S.C. 154(b) by 492 days.

(21) Appl. No.: **12/570,841**

(22) Filed: **Sep. 30, 2009**

(51) **Int. Cl.**
G01F 22/00 (2006.01)

(52) **U.S. Cl.** ..... **73/290 B**; 73/290 V; 73/304 R

(58) **Field of Classification Search** ..... 73/290 B, 73/290 R, 290 V, 291, 304 R
See application file for complete search history.

(56) **References Cited**

U.S. PATENT DOCUMENTS

3,237,451	A *	3/1966	Haeff	73/149
3,312,107	A	4/1967	Burns et al.	
3,447,374	A *	6/1969	Cohn et al.	73/290 R
3,540,275	A	11/1970	Post et al.	
3,569,827	A	3/1971	Dryden et al.	
3,988,933	A *	11/1976	Fletcher et al.	73/865
4,170,135	A	10/1979	Booman et al.	
4,495,807	A	1/1985	Field et al.	
4,535,627	A *	8/1985	Prost et al.	73/290 B
4,729,245	A	3/1988	Hansman, Jr.	
4,740,726	A *	4/1988	Umezawa	310/316.01
5,092,170	A	3/1992	Honstvet et al.	
5,247,832	A *	9/1993	Umezawa et al.	73/290 V
5,251,482	A *	10/1993	Bates et al.	73/290 V
5,407,092	A *	4/1995	Hardgrove et al.	220/590
5,602,333	A *	2/1997	Larrabee et al.	73/149
6,218,843	B1 *	4/2001	Zimmerman et al.	324/426
6,505,509	B2	1/2003	Gualtieri	
6,546,795	B1 *	4/2003	Dietz	73/290 R
7,113,660	B2 *	9/2006	Andrews et al.	385/13
7,114,384	B1 *	10/2006	Bates et al.	73/149
7,191,069	B2	3/2007	Wishart et al.	
7,474,911	B2	1/2009	Ya'akov et al.	
8,066,343	B2 *	11/2011	Nishihara	347/7
2004/0149030	A1 *	8/2004	Heilig	73/290 V
2006/0007253	A1 *	1/2006	Kosugi	347/7
2006/0042386	A1 *	3/2006	Young et al.	73/579
2010/0218599	A1 *	9/2010	Young et al.	73/290 V

FOREIGN PATENT DOCUMENTS

JP 55110918 A * 8/1980

OTHER PUBLICATIONS

Zimmerli et al., "Radiofrequency Tank Modes Tested at NASA Glenn to Gauge Liquid Oxygen and Liquid Methane", 2007 Research and Technology Report, NASA Glenn Research Center, Jun. 2008.*

(Continued)

Primary Examiner — David Rogers
(74) *Attorney, Agent, or Firm* — Roger D. Emerson; Robert H. Earp, III

(57) **ABSTRACT**

A method for measuring the quantity of fluid in a tank may include the steps of selecting a match between a measured set of electromagnetic eigenfrequencies and a simulated plurality of sets of electromagnetic eigenfrequencies using a matching algorithm, wherein the match is one simulated set of electromagnetic eigenfrequencies from the simulated plurality of sets of electromagnetic eigenfrequencies, and determining the fill level of the tank based upon the match.

20 Claims, 13 Drawing Sheets

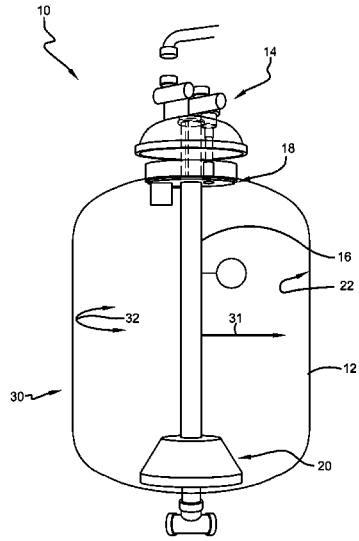

OTHER PUBLICATIONS

Gregory A. Zimmerli, et al., Radio Frequency Mass Gauging of Propellants, report, Aug. 2007, NASA/TM—2007-214907, AIAA-2007-1198, USA.

Jackson, J.D., "Classical Electrodynamics", 2nd ed., John-Wiley & Sons, New York, 1975, Chap. 8.

D. Celik, S.W. Van Sciver, "Dielectric coefficient and density of subcooled liquid oxygen", report, 2005, pp. 356-361, Cryogenics 45, Elsevier Ltd., United States.

James D. Lockhart, "RF Liquid Level Sensing Technique", report, Feb. 28, 1966, pp. 1-131, LMSC-A785006, Lockheed Missiles & Space Company.

The Bendix Corporation Instruments & Life Support Division, "RF Quantity Gauging System", Summary Report, Mar. 23, 1972, pp. 1-13, Pub. No. 4918-72, The Bendix Corporation Instruments & Life Support Division, Davenport, Iowa.

A.J. Bahr and A. Karp, "Study of Zero-G Propellant Gauging Based on Tank Electromagnetic Resonances", Report, Apr. 1975, pp. 1-74, L33569, Stanford Research Institute, Menlo Park, California.

R.S. Collier, D. Ellerbruch, J.E. Cruz, R. W. Stokes, P. E. Luft, R. G. Peterson, A.E. Hiester, "Mass Quantity Gauging by RF Mode Analysis", Interim Report, Feb. 1973, pp. 1-37, NBSIR73-318, Cryogenics Division Institute for Basic Standards National Bureau of Standards, Boulder, Colorado.

G. Goubau, "Electromagnetic Waveguides and Cavities", Report, 1961, pp. 1-4, Section 25, Pergamon Press, London.

Ball Aerospace Systems Group, K. Van Leuven, "Zero-Gravity Quantity Gaging System Bench-Top Tests", engineering report, May 1988, pp. 1-45, Report #ZG-011, Ball Aerospace Systems Group, Boulder, Colorado.

G. Zimmerli, K. Vaden, M. Herlacher, D. Buchanan, N. Vandresar, "Radio Frequency Mass Gauging of Propellants: Applications to Low-Gravity Gauging," 2007 AIAA Aerospace Sciences Meeting, NASA.

* cited by examiner

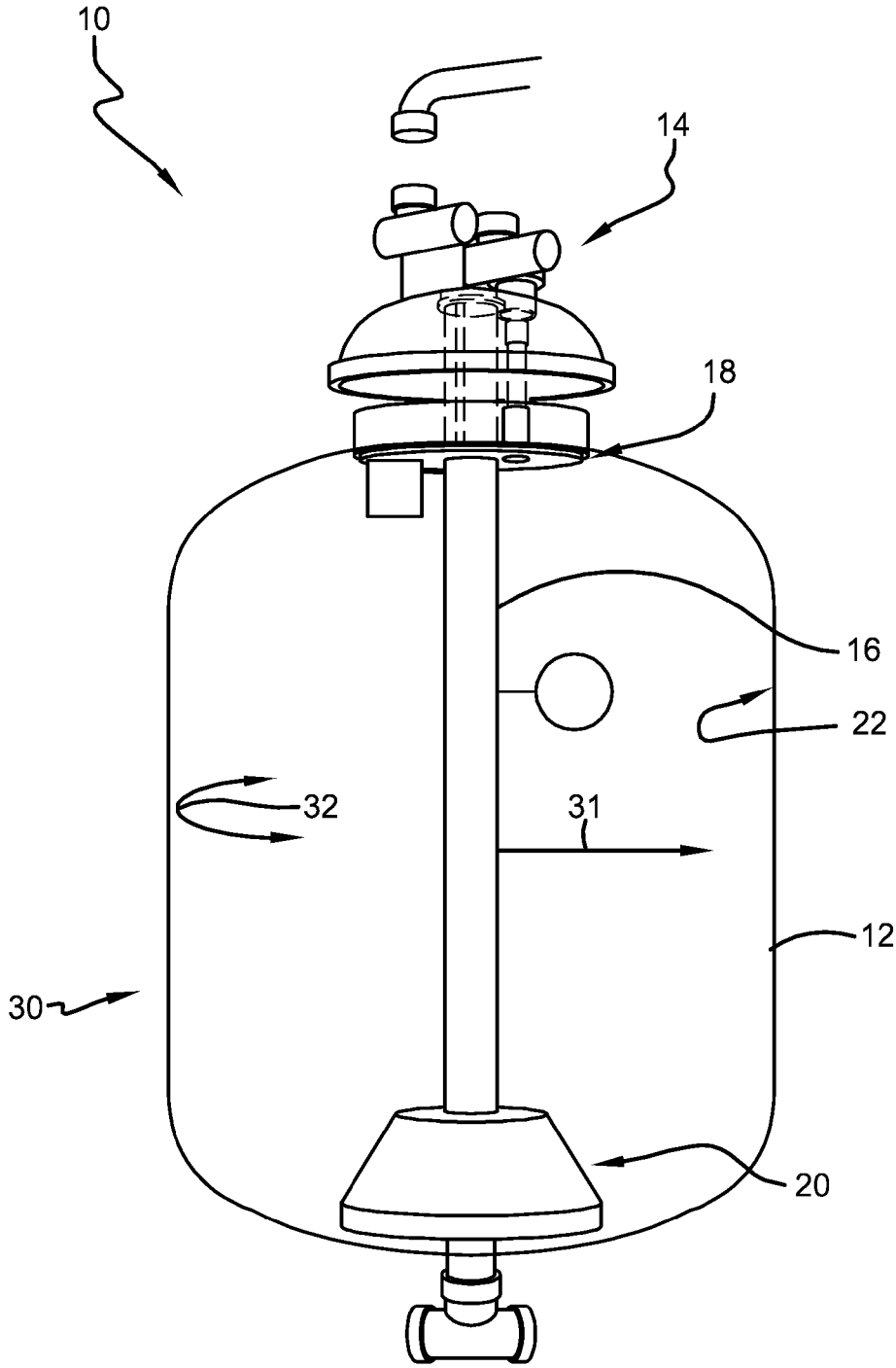

FIG.-1

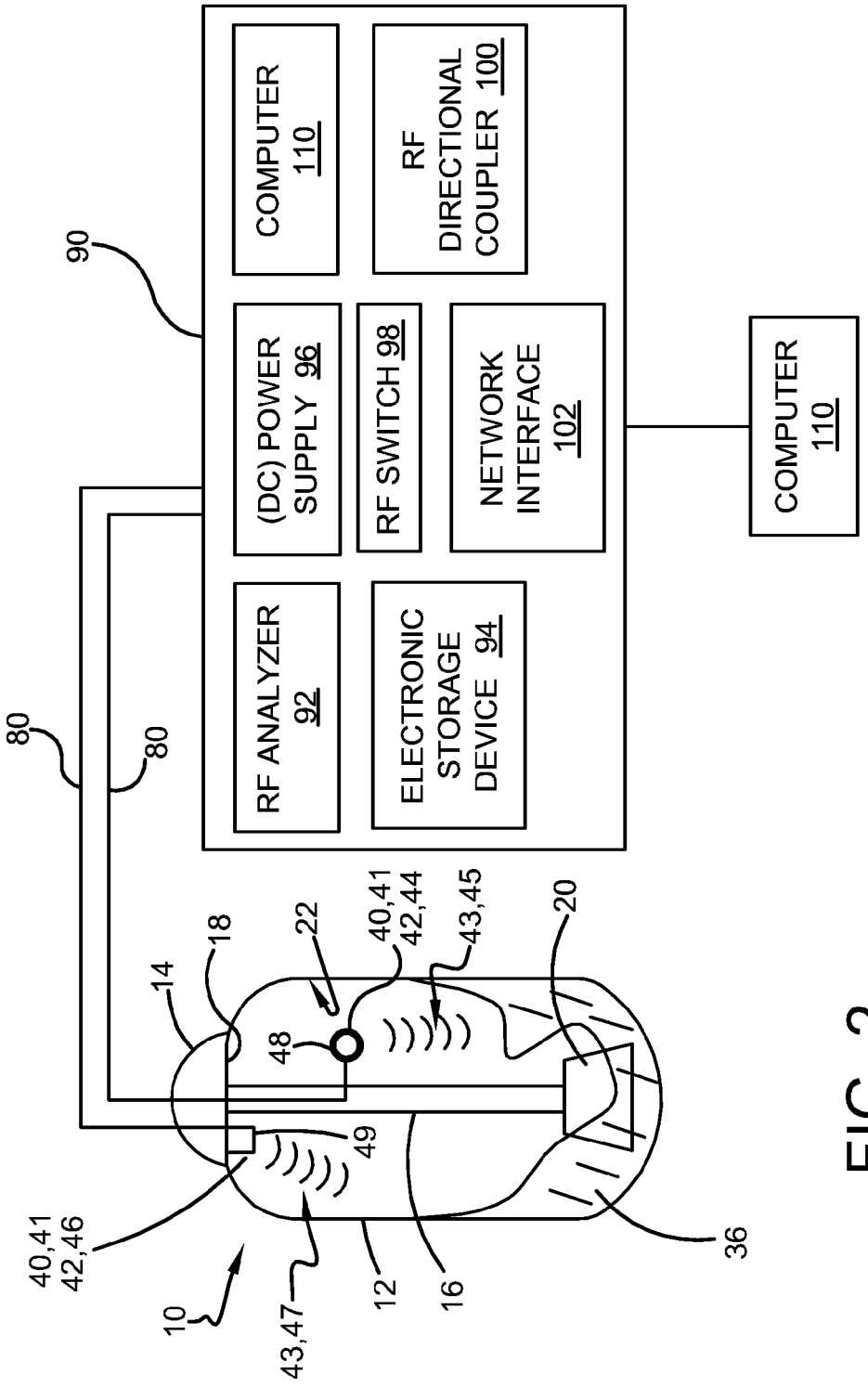
90
COMPUTER 110
RF DIRECTIONAL COUPLER 100
(DC) POWER SUPPLY 96
RF SWITCH 98
NETWORK INTERFACE 102
COMPUTER 110
RF ANALYZER 92
ELECTRONIC STORAGE DEVICE 94
80
80
14
18
22
40,41 42,44
43,45
20
48
49
40,41 42,46
10
43,47
12
16
36

FIG.-2

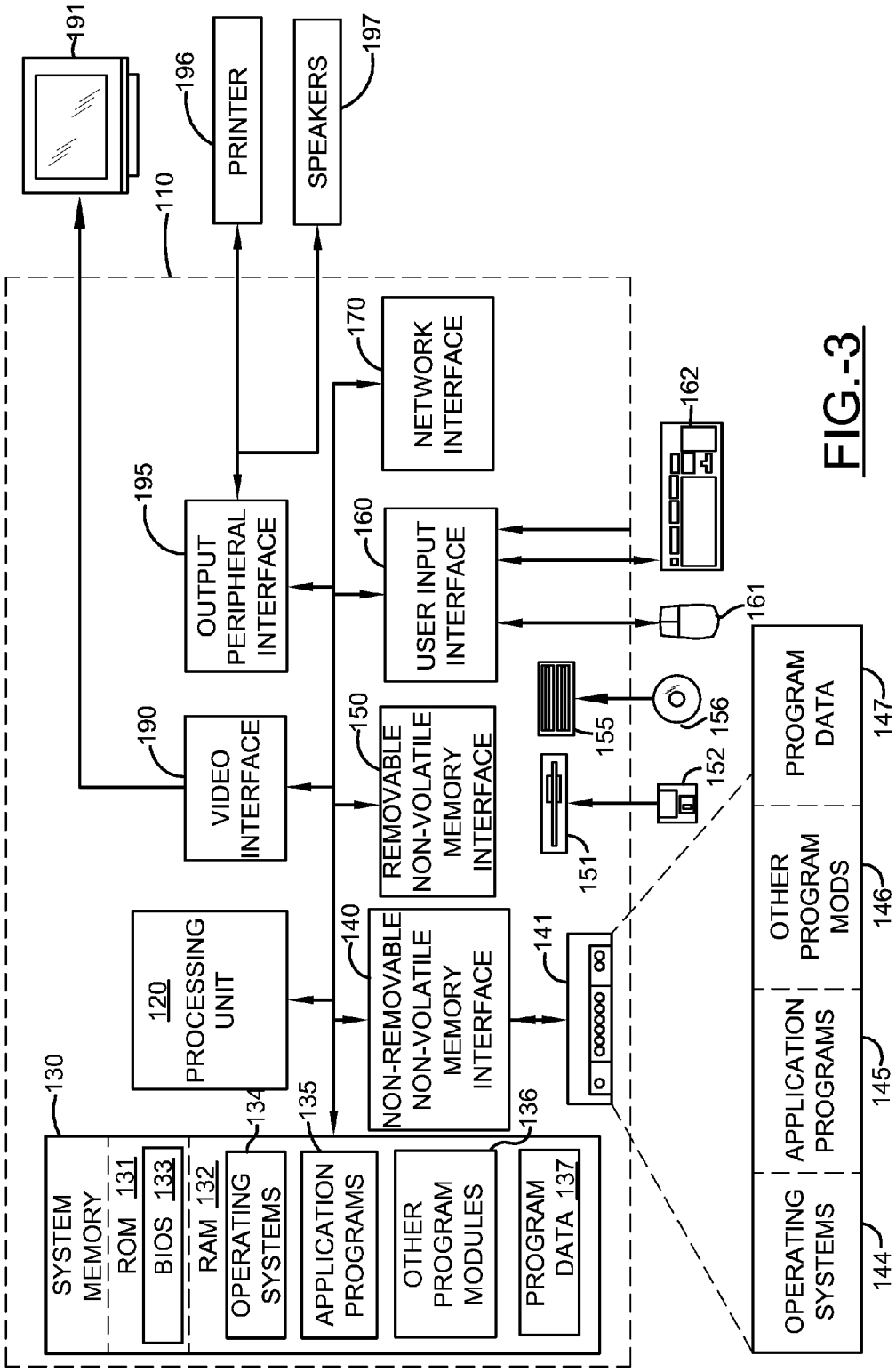
191
196
PRINTER
SPEAKERS
197
110
170
NETWORK INTERFACE
162
195
OUTPUT PERIPHERAL INTERFACE
160
USER INPUT INTERFACE
161
190
VIDEO INTERFACE
150
REMOVABLE NON-VOLATILE MEMORY INTERFACE
155
156
152
151
120 PROCESSING UNIT
140
NON-REMOVABLE NON-VOLATILE MEMORY INTERFACE
141
130
SYSTEM MEMORY
ROM 131
BIOS 133
RAM 132
134
OPERATING SYSTEMS
135
APPLICATION PROGRAMS
136
OTHER PROGRAM MODULES
PROGRAM DATA 137
PROGRAM DATA
147
OTHER PROGRAM MODS
146
APPLICATION PROGRAMS
145
OPERATING SYSTEMS
144

FIG.-3

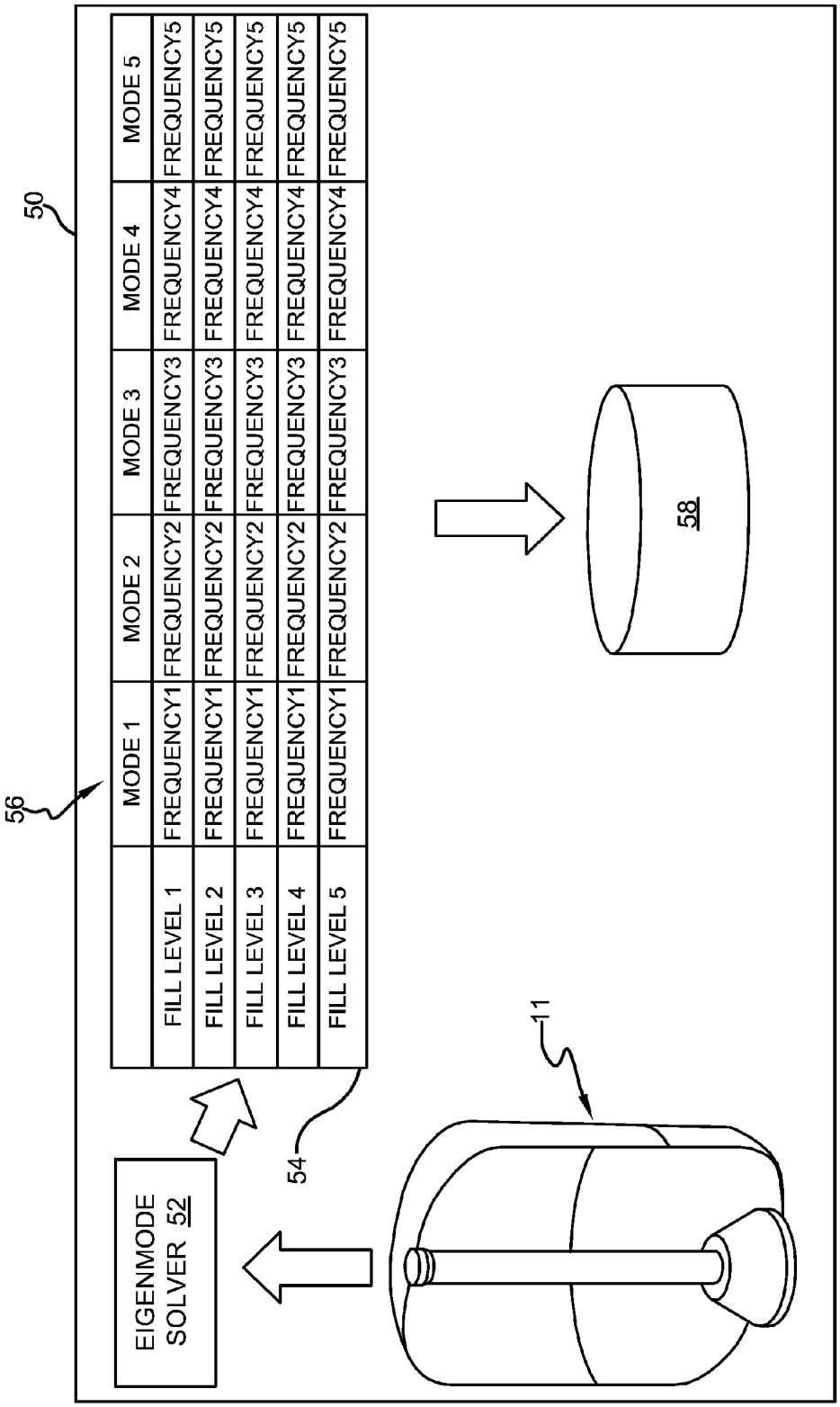
50
56
MODE 1
MODE 2
MODE 3
MODE 4
MODE 5
FILL LEVEL 1
FREQUENCY1
FREQUENCY2
FREQUENCY3
FREQUENCY4
FREQUENCY5
FILL LEVEL 2
FREQUENCY1
FREQUENCY2
FREQUENCY3
FREQUENCY4
FREQUENCY5
FILL LEVEL 3
FREQUENCY1
FREQUENCY2
FREQUENCY3
FREQUENCY4
FREQUENCY5
FILL LEVEL 4
FREQUENCY1
FREQUENCY2
FREQUENCY3
FREQUENCY4
FREQUENCY5
FILL LEVEL 5
FREQUENCY1
FREQUENCY2
FREQUENCY3
FREQUENCY4
FREQUENCY5
EIGENMODE SOLVER 52
54
11
58

FIG.-4

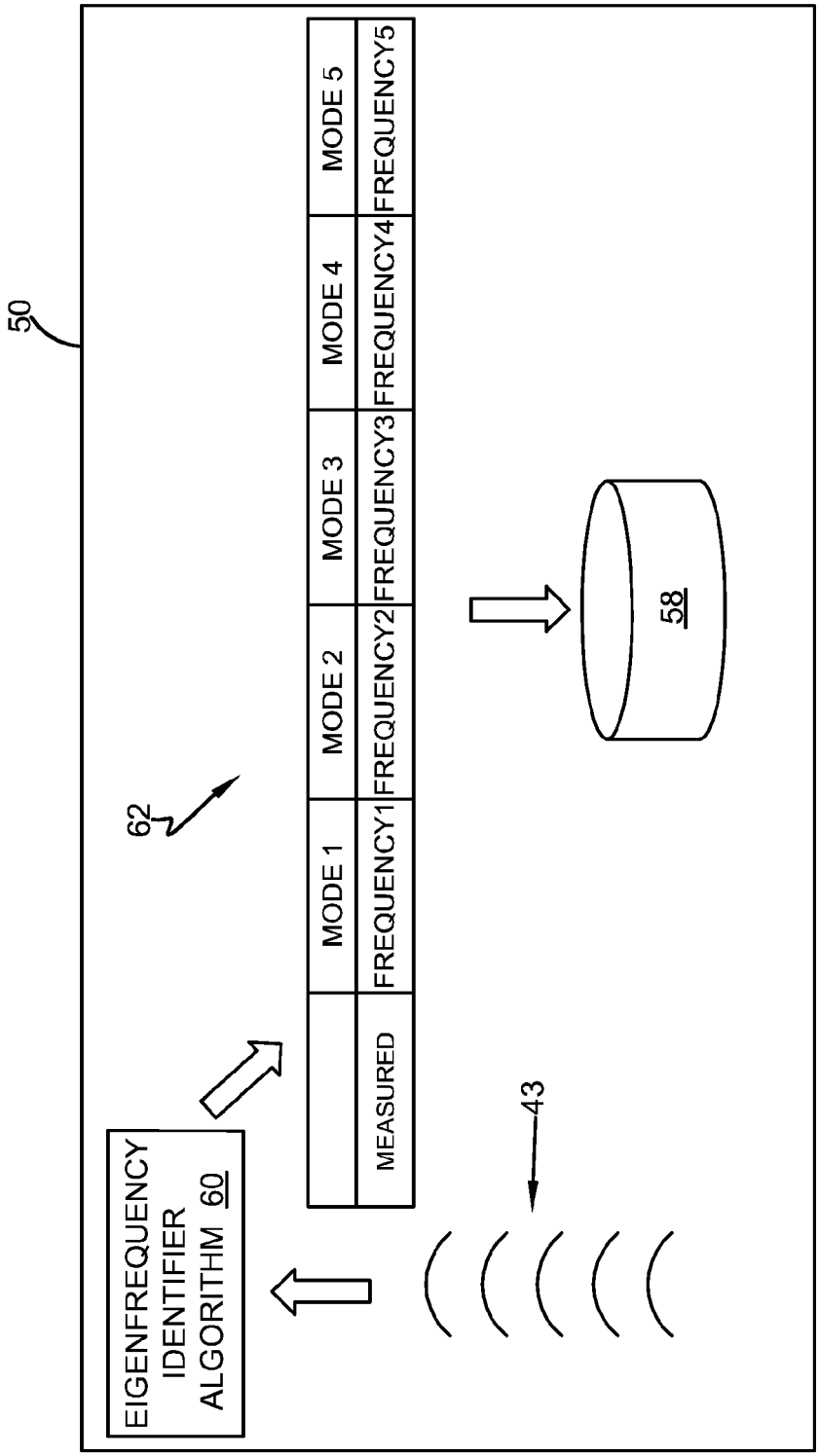
50
EIGENFREQUENCY IDENTIFIER ALGORITHM 60
62
MEASURED
MODE 1
MODE 2
MODE 3
MODE 4
MODE 5
FREQUENCY1
FREQUENCY2
FREQUENCY3
FREQUENCY4
FREQUENCY5
43
58

FIG.- 5

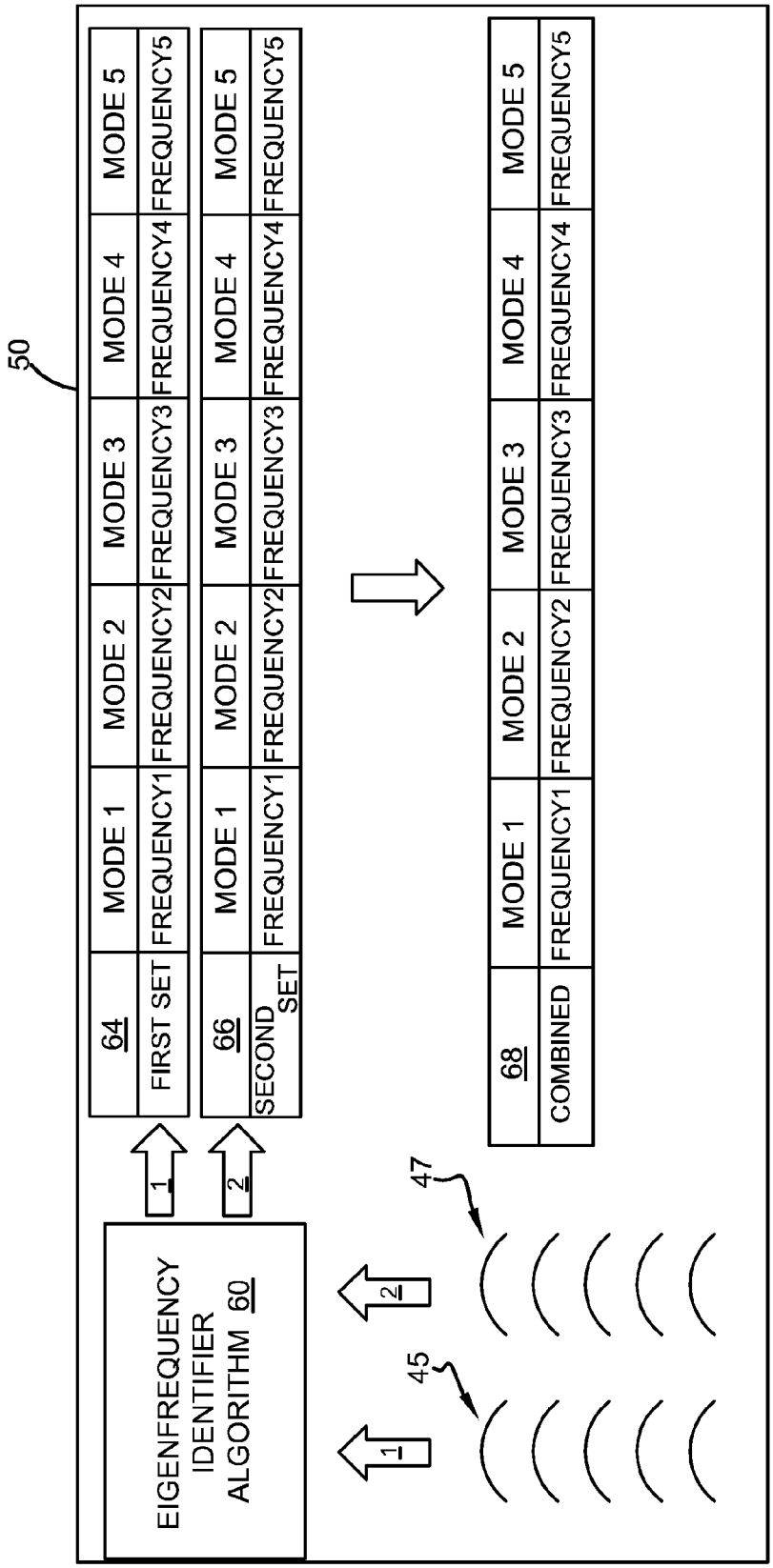
50
64
FIRST SET
MODE 1
FREQUENCY1
MODE 2
FREQUENCY2
MODE 3
FREQUENCY3
MODE 4
FREQUENCY4
MODE 5
FREQUENCY5
66
SECOND SET
MODE 1
FREQUENCY1
MODE 2
FREQUENCY2
MODE 3
FREQUENCY3
MODE 4
FREQUENCY4
MODE 5
FREQUENCY5
68
COMBINED
MODE 1
FREQUENCY1
MODE 2
FREQUENCY2
MODE 3
FREQUENCY3
MODE 4
FREQUENCY4
MODE 5
FREQUENCY5
1
2
EIGENFREQUENCY IDENTIFIER ALGORITHM 60
47
45
1
2

FIG.-6

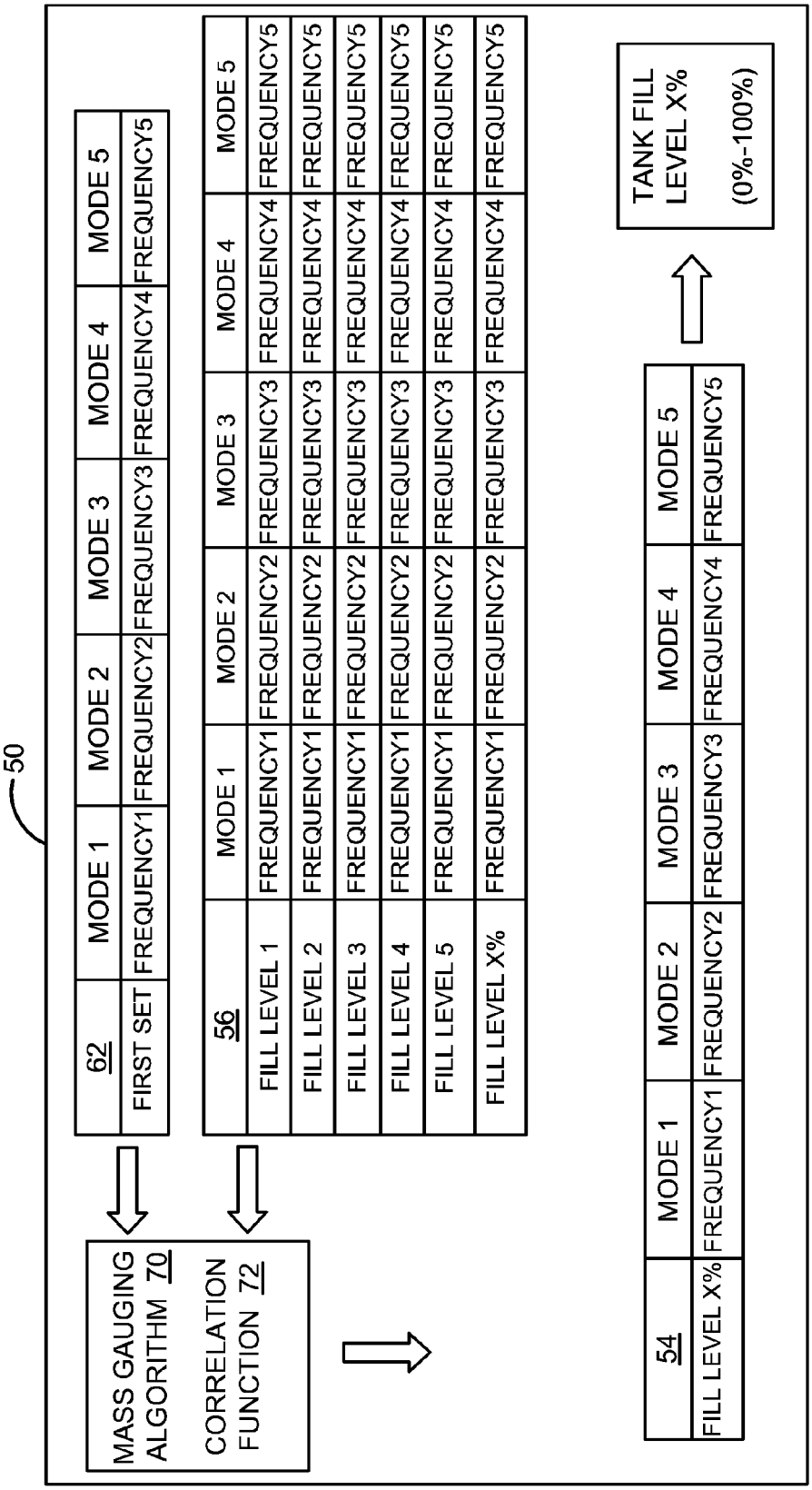
50
62
FIRST SET
MODE 1
FREQUENCY1
MODE 2
FREQUENCY2
MODE 3
FREQUENCY3
MODE 4
FREQUENCY4
MODE 5
FREQUENCY5
56
FILL LEVEL 1
FILL LEVEL 2
FILL LEVEL 3
FILL LEVEL 4
FILL LEVEL 5
FILL LEVEL X%
MODE 1
MODE 2
MODE 3
MODE 4
MODE 5
FREQUENCY1
FREQUENCY2
FREQUENCY3
FREQUENCY4
FREQUENCY5
MASS GAUGING ALGORITHM 70
CORRELATION FUNCTION 72
54
FILL LEVEL X%
MODE 1
FREQUENCY1
MODE 2
FREQUENCY2
MODE 3
FREQUENCY3
MODE 4
FREQUENCY4
MODE 5
FREQUENCY5
TANK FILL LEVEL X%
(0%-100%)

FIG.-7

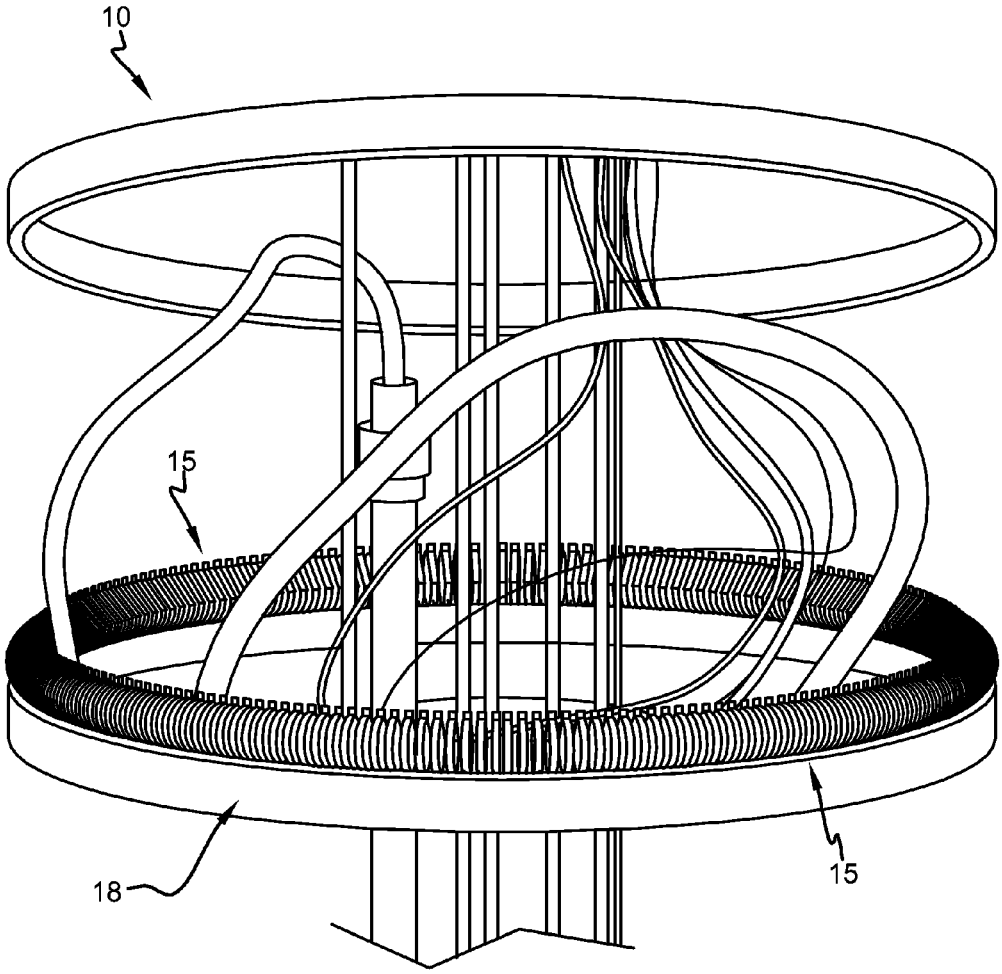

FIG.-8

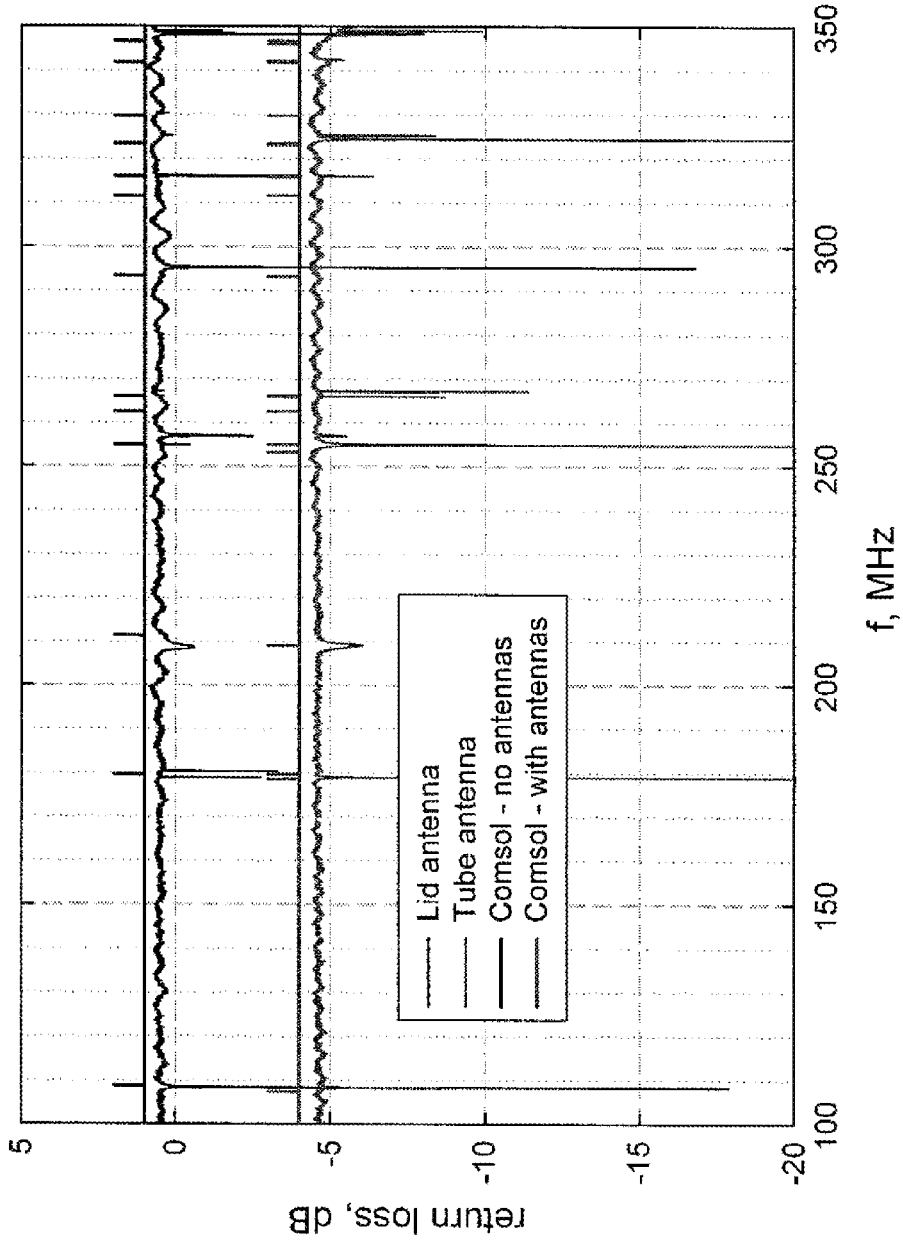
Lid antenna
Tube antenna
Comsol - no antennas
Comsol - with antennas
return loss, dB
f, MHz
5
0
-5
-10
-15
-20
100
150
200
250
300
350

FIG – 9

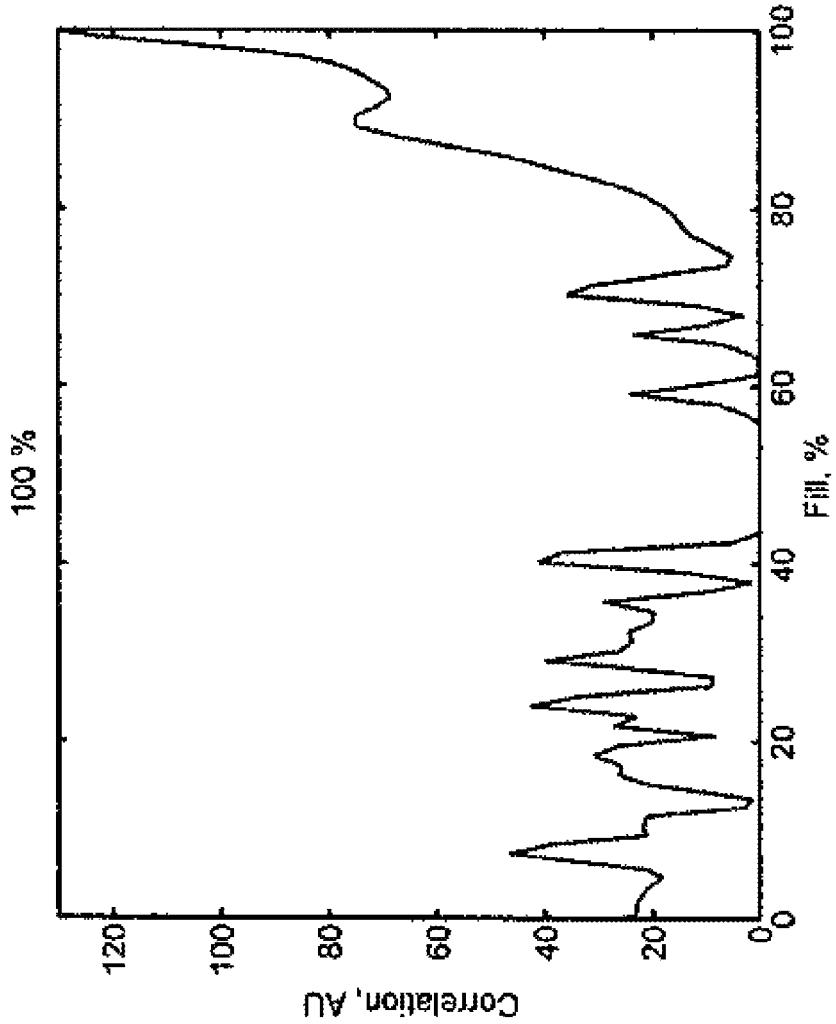

FIG – 10a

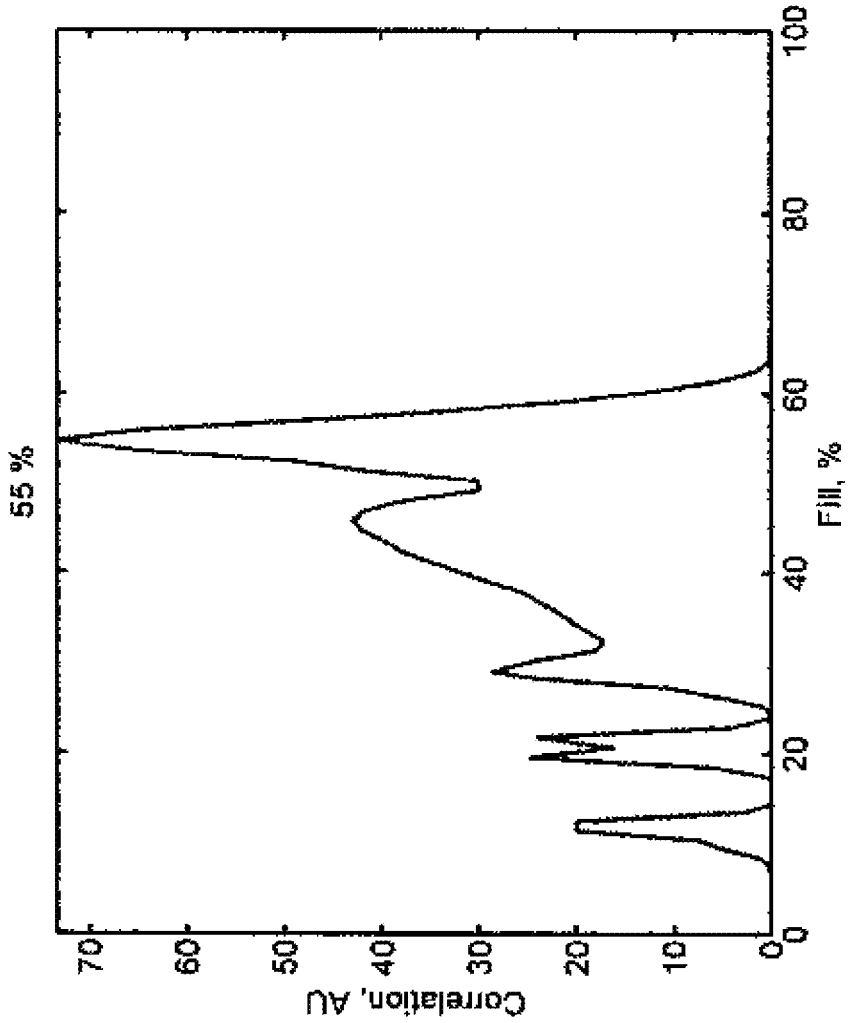

FIG – 10b

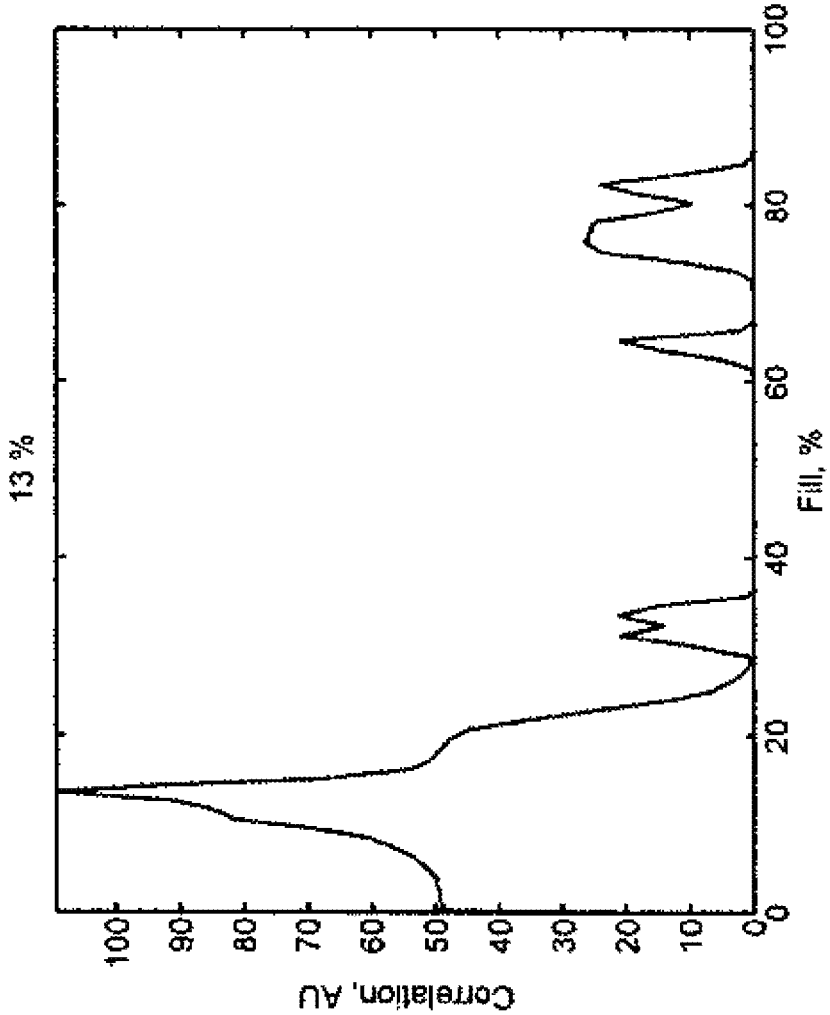
13 %
Correlation, AU
100
90
80
70
60
50
40
30
20
10
0
0
20
40
60
80
100
Fill, %

FIG – 10c

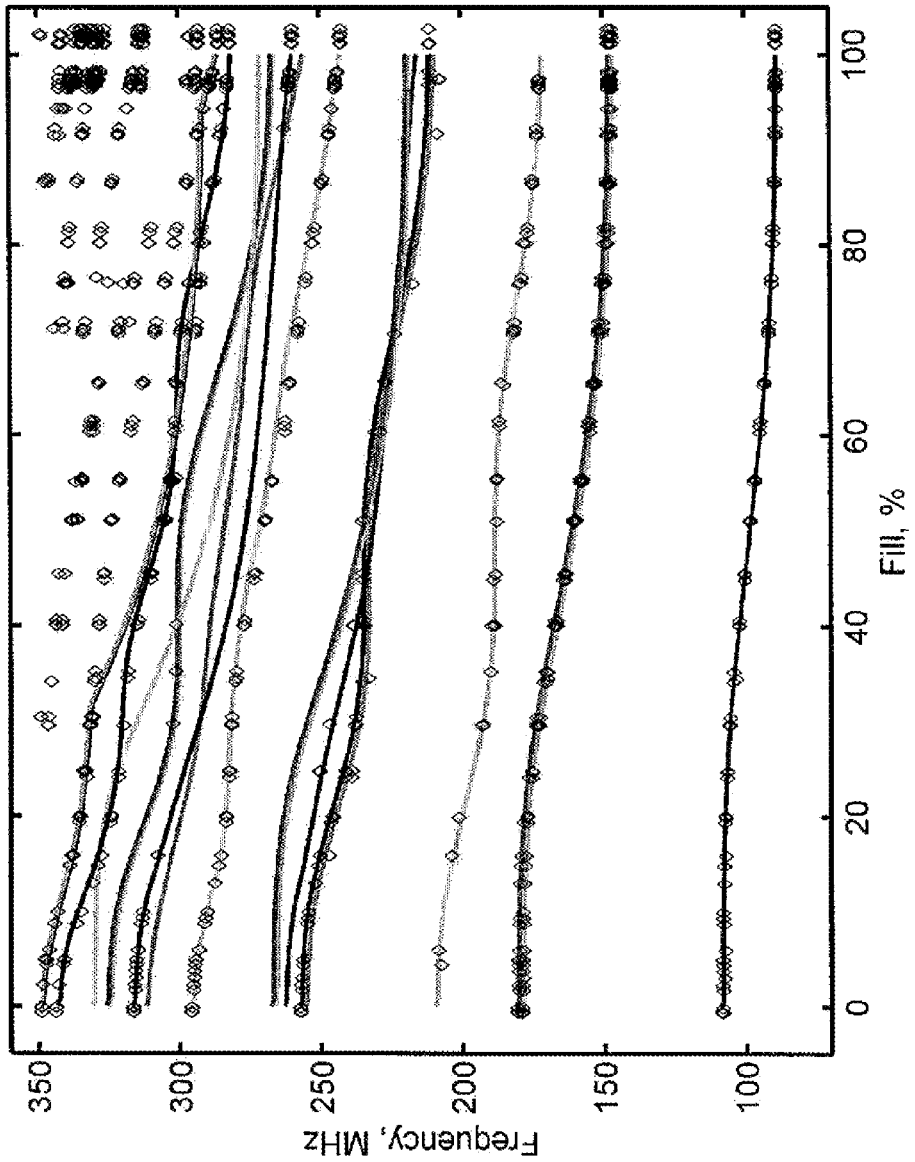

FIG – 11

RADIO FREQUENCY TANK EIGENMODE SENSOR FOR PROPELLANT QUANTITY GAUGING

I. ORIGIN OF THE INVENTION

The invention described herein was made by an employee of the United States Government and may be manufactured and used by or for the Government for Government purposes without the payment of any royalties thereon or therefore.

II. BACKGROUND OF THE INVENTION

A. Field of Invention

This invention relates generally to measuring the quantity of liquid in a storage container and more particularly to gauge the quantity of propellant in a tank.

B. Description of the Related Art

It is well known in the art to measure the amount of liquid in a storage tank. The general concept of measuring the electromagnetic eigenmodes of a tank as a method to gauge the quantity of liquid in a propellant tank dates back to 1966, when Lockheed Missiles and Space Company first tested the technique as a level sensor in tanks partially filled with RP-1, liquid hydrogen, and liquid oxygen.

While known measurement methods perform well for their intended purpose, there are limitations. One limitation is that the configuration of the liquid in the tank at low or partial gravity is uncertain. Another limitation is that the configuration of a liquid, which is sloshing or splashing within the tank at any gravity, is uncertain. Another limitation is the complexity of converting a tank radio frequency (RF) spectrum into a propellant quantity reading. Another limitation is accurately predicting the field modes of the tank.

Therefore, what is needed is a highly accurate RF measurement method and apparatus to gauge the amount of propellant in a tank.

III. SUMMARY

According to one embodiment of this invention, a method for measuring the quantity of fluid in a tank may include the steps of: simulating a plurality of sets of electromagnetic eigenfrequencies of the tank for a range of fill levels using an electromagnetic eigenmode solver algorithm, wherein each simulated set of electromagnetic eigenfrequencies represents a specific fill level within the tank; inputting the simulated plurality of sets of electromagnetic eigenfrequencies into a computer database; transmitting a first range of radio waves using a transmitting device located inside the tank; receiving the first range of radio waves using a receiving device located inside the tank; identifying a measured set of electromagnetic eigenfrequencies in the first range of radio waves using an eigenfrequency identifier algorithm; comparing the measured set of electromagnetic eigenfrequencies to the simulated plurality of sets of electromagnetic eigenfrequencies; selecting a match between the measured set of electromagnetic eigenfrequencies and the simulated plurality of sets of electromagnetic eigenfrequencies using a matching algorithm, wherein the match is one simulated set of electromagnetic eigenfrequencies from the simulated plurality of sets of electromagnetic eigenfrequencies; and determining the fill level of the tank based upon the match. In another embodiment, each simulated set of electromagnetic eigenfrequencies may represent a specific fluid configuration at a specific fill level of the tank, wherein the fluid has at least one configuration at the specific fluid fill level of the tank. The fluid may have at least one configuration at each fluid fill level of the tank. The fluid may have a plurality of different configurations at the specific fluid fill level of the tank. A single antenna may include the transmitting device and the receiving device.

According to another embodiment of this invention, an apparatus for measuring a quantity of fluid may include a tank; a simulator device comprising an eigenmode solver computer algorithm for simulating a plurality of sets of electromagnetic eigenfrequencies of the tank for a range of fill levels, wherein each simulated set of electromagnetic eigenfrequencies represents a specific fill level within the tank; an electronic data storage device for storing the simulated plurality of sets of electromagnetic eigenfrequencies; a transmitter device located inside the tank for transmitting a first range of radio waves; a receiver device located inside the tank for receiving the first range of radio waves; an identifier device comprising an eigenfrequency identifier computer algorithm for identifying a measured set of electromagnetic eigenfrequencies in the first range of radio waves; a comparer device for comparing the measured set of electromagnetic eigenfrequencies to the simulated plurality of sets of electromagnetic eigenfrequencies; a selector device for selecting a match between the measured set of electromagnetic eigenfrequencies and the simulated plurality of sets of electromagnetic eigenfrequencies using a matching computer algorithm, wherein the match is one simulated set from the simulated plurality of sets of electromagnetic eigenfrequencies; and a determiner device for determining the fill level of the tank based upon the match. In another embodiment, each simulated set of electromagnetic eigenfrequencies may represent a specific fluid configuration at a specific fill level of the tank, wherein the fluid has at least one configuration at the specific fluid fill level of the tank. The fluid may have at least one configuration at each fluid fill level of the tank. The fluid may have a plurality of different configurations at the specific fluid fill level of the tank.

One advantage of this invention is that the liquid in the tank does not have to be settled first before taking a quantity measurement.

Another advantage of this invention is that no calibration of the quantity measurement is required.

Still other benefits and advantages of the invention will become apparent to those skilled in the art to which it pertains upon a reading and understanding of the following detailed specification.

IV. BRIEF DESCRIPTION OF THE DRAWINGS

The invention may take physical form in certain parts and arrangement of parts, embodiments of which will be described in detail in this specification and illustrated in the accompanying drawings which form a part hereof and wherein:

FIG. **1** is a perspective view of a tank;

FIG. **2** is a diagram of the tank and a radio frequency measurement system;

FIG. **3** is a diagram of a computer system;

FIG. **4** is a diagram of a radio frequency measurement system including an eigenmode solver;

FIG. **5** is a diagram of a radio frequency measurement system including an eigenfrequency identifier algorithm;

FIG. **6** is a diagram of a radio frequency measurement system including an eigenfrequency identifier algorithm; and

FIG. **7** is a diagram of a radio frequency measurement system including a mass gauging algorithm.

FIG. **8** is a perspective view of the top of the tank with the lid removed.

FIG. **9** is a graph of a return loss spectrum of tank using two antennas.

FIG. **10***a* is a graph of the output from the correlation function as a function of fill level, at a fill level of 100%.

FIG. **10***b* is a graph of the output from the correlation function as a function of fill level, at a fill level of 55%.

FIG. **10***c* is a graph of the output from the correlation function as a function of fill level, at a fill level of 13%.

FIG. **11** is a graph of the measured eigenmodes detected by an antenna (symbols) with the computer-simulated eigenmodes (solid lines) as a function of fluid fill level.

V. DETAILED DESCRIPTION

Referring to the drawings wherein the showings are for purposes of illustrating embodiments of the invention only and not for purposes of limiting the same, and wherein like reference numerals are understood to refer to like components, FIGS. **1** and **2** show a propellant tank **10** according to one embodiment of this invention. The tank **10** may have any design or shape chosen with ordinary skill in the art. The tank **10** may be located in many various gravity environments including, but not limited to, the Earth's gravity (about 1 g), low gravity (less than or equal to about 0.5 g), the Moon's gravity, or zero gravity. The tank **10** may include walls **12**, a lid **14**, a central tube **16**, a baffle plate **18**, a sump **20**, and other tank hardware as is well known in the art. The walls **12** may be formed of metal, and in one embodiment, are formed of stainless steel. Alternatively, the walls **12** may be formed of any non-metallic or partially metallic material chosen by one with ordinary skill in the art. In this alternate embodiment, the walls **12** may include an inner liner **22** formed of metal. The walls **12** may also serve to contain the RF energy. The EM wave may penetrate a finite distance into the metal, by a characteristic 1/e length known as the skin depth. The skin depth is $\delta=(2/\mu\sigma\omega)^{1/2}$ where σ is the electrical conductivity, μ is the magnetic permeability, and $\omega=2\Pi f$ is the angular frequency. For one non-limiting example, type **304** stainless steel has a skin depth of approximately 42 μm at room temperature and at a frequency of about 100 MHz. The tank **10** may include a cylindrical portion **30**, which has a radial vector direction **31** and a circumferential vector direction **32**. The tank **10** may contain and store dielectric fluid **36**. In one embodiment, the tank **10** contains and stores a cryogenic propellant **36** including, but limited to, liquid hydrogen, liquid oxygen, and liquid methane.

With continuing reference to FIGS. **1** and **2**, a transmitting device **40** may be located in the interior **38** of the tank **10**. The transmitting device **40** may transmit a frequency range of radio waves **43**. The transmitting device **40** may be any type of antenna. By antenna, we mean any apparatus for sending and/or receiving electromagnetic waves. The frequency range of radio waves **43** may be any frequency range chosen with ordinary skill in the art. The frequency range of radio waves **43** may have any increment chosen with ordinary skill in the art. The chosen frequency range for the frequency range of radio waves **43** may depend upon the design and/or shape of the tank **10**. In one embodiment, the frequency range of radio waves **43** is from about 50 MHz to about 350 MHz in 0.0333 MHz increments. A receiving device **41** may also be located in the interior **38** of the tank **10**. The receiving device **41** may receive the frequency range of radio waves **43** transmitted by the transmitting device **40**. The receiving device **41** may be any type of antenna. In one embodiment, the transmitting device **40** and the receiving device **41** are the same antenna **42**. The antenna **42** may be any type of antenna chosen with ordinary skill in the art including, but not limited to, a dipole antenna, a monopole antenna, a loop antenna, or any other suitable design for exciting and detecting the electromagnetic eigenfrequencies of the tank. The antenna **42** may have any design chosen with ordinary skill in the art. One or more antennas **42** may be located in the interior **38** of the tank **10** at any location chosen by one with ordinary skill in the art. Only one antenna **42** is needed to perform a radio frequency mass gauge (RFMG) measurement, as will be described in more detail below. The use of two or more antennas **42** offers a level of redundancy and enables detection of more eigenmodes, which can result in a more accurate RFMG measurement. Each antenna **42** may transmit and receive a frequency range of radio waves **43**. In one embodiment, a first antenna **44** transmits a first range of radio waves **45**, and the first antenna **44** receives the first range of radio waves **45**; a second antenna **46** transmits a second range of radio waves **47**, and the second antenna **46** receives the second range of radio waves **47**. The antenna **42** may be fabricated from coax cable. In one embodiment, the antenna **42** is fabricated from a 0.250 inches outside diameter rigid stainless steel coax cable, having a stainless steel inner conductor and a Teflon insulator. The inner conductor can extend beyond the outer conductor and the insulator, and thus become an active radiating element of the antenna **42**. The size of the antenna may depend on tank size. The antenna **42** may have any shape chosen by one with ordinary skill in the art. For some non-limiting examples, the antenna **42** can have a substantially circular or substantially rectangular shape.

With continuing reference to FIGS. **1** and **2**, the first antenna **44** may have a substantially circular portion **48**, according to one embodiment. The first antenna **44** may be positioned on the central tube **16** of the tank **10**. In one embodiment, the substantially circular portion **48** may define a plane, in which a vector normal to the plane is positioned in the circumferential vector direction **32** of the cylindrical portion **30** of the tank **10**. The second antenna **46** may have a substantially rectangular portion **49**, according to one embodiment. The second antenna **46** may be positioned on the baffle plate **18** of the tank **10**. The second antenna **46** may be electrically grounded to the baffle plate **18**. In one embodiment, the substantially rectangular portion **49** may define a plane, in which a vector normal to the plane is positioned approximately 45° with respect to both the radial vector direction **31** and the circumferential vector direction **32** of the cylindrical portion **30** of the tank **10**.

With reference to FIG. **1**, the tank **10** will be described in detail according to one embodiment. The test tank used is a 58 cu. ft. volume stainless steel tank rated for use up to 250 psia. The tank shape is a 48 inch diameter cylindrical section **30** with elliptical ends, and a domed lid **14**. A baffle plate **18** separated the domed lid **14** from the remainder of the tank and provided a clean hardware configuration for the RF modes. The upper dome section contained the wiring, tubing connections, and the section of a spray bar that was used to periodically cool the upper part of the tank. The spray bar was operated by running a pump, which was housed in the lower part of the tank inside a sump. During pump operation, liquid oxygen enters the pump inlet near the bottom of the tank and is sprayed through small holes in the upper end of the spray bar, located in the domed section. The pump is located in the sump enclosure, which was constructed of perforated stainless steel, having an array of ⅛" diameter holes. The sump, the baffle plate, and the central tube all had electromagnetic interference (EMI) fingers **15** along their perimeters, as shown in FIG. **8**, to provide a good conduction path between these hardware elements and the tank walls for the RF mode surface currents. The baffle plate also had a 3" diameter

screened hole, to aid in fluid/vapor exchange between the dome and tank, and also a 3" diameter hole to accommodate the later addition of mass gauge hardware. The central tube **16** contains the fill/drain line, a temperature diode rake, a spray bar tube, and a capacitance probe. A temperature diode located at the baffle plate position was used to define the liquid level at the 100% fill condition. The pump and spray bar provided additional cooling to the upper dome section, and was used on occasion to achieve a more uniform temperature distribution in the tank.

With reference to FIG. **2**, a coax cable **80** connects the antenna **42** to an RFMG electronics unit **90**. The coax cable **80** can be spaceflight-rated coax cable (manufactured by W. L. Gore and Associates), or Microcoax UFB211A coax cable, or any other cable chosen by one with ordinary skill in the art. The connection mechanism **82** between the coax cable **80** and the antenna **42** can be a subminature-A (SMA) connector, or a TNC connector, or any other connection means chosen by one with ordinary skill in the art. The RFMG electronics unit **90** may include an RF analyzer **92**, an electronic data storage device **94**, a direct current (DC) power supply **96**, an RF switch **98**, an RF directional coupler **100**, a network interface **102** and a computer **110**. In one embodiment, the RF analyzer **92** is a Rhode & Schwartz FSH-323 analyzer. An external computer **110** may connect to the RFMG electronics unit **90** via an Ethernet cable **104** to either the network interface **102** or the RFMG electronics unit computer **110**. The external computer **110** may operate the RFMG electronics unit **90** remotely through the Ethernet connection.

With reference now to FIG. **3**, a computer **110** may include, but is not limited to, a processing unit **120**, a system memory **130**, and a system bus **121** that couples various system components, including the system memory to the processing unit **120**. The system bus **121** may be any of several types of bus structures using any of a variety of bus architectures, as is well known in the art. The system memory **130** includes computer storage media in the form of volatile and non-volatile memory such as read-only memory (ROM) **131** and random access memory (RAM) **132**. The ROM **131** may include a basic input/output system (BIOS) **133**. The RAM may include an operating system **134**, application programs **135**, other program modules **136**, and program data **137**. The computer **110** may include a hard disk drive **141** that reads from or writes to non-removable, non-volatile magnetic media, a magnetic disk drive **151** that reads from or writes to a removable, non-volatile magnetic disk **152**, and an optical disk drive **155** that reads from or writes to a removable, non-volatile optical disk **156**, such as a CD-ROM, digital versatile disks (DVD), or other optical media. The computer **110** may also include magnetic tape cassettes, flash memory cards, digital versatile disks, digital video tape, solid state RAM, and solid state ROM.

With continuing reference to FIG. **3**, the hard disk drive **141** is typically connected to the system bus **121** through a non-removable memory interface **140**, and the magnetic disk drive **151** and optical disk drive **155** are typically connected to the system bus **121** by a removable memory interface **150**. The hard disk drive **141** may store the operating system **144**, application programs **145**, other program modules **146**, and program data **147**. A user may enter commands and information into the computer **110** through input devices such as a keyboard **162** and pointing device **161**, commonly referred to as a mouse, trackball, or touch pad. These and other input devices are often connected to the processing unit **120** through a user input interface **160** that is coupled to the system bus, but may be connected by other interface and bus structures, such as a parallel port, game port or a universal serial bus (USB). A monitor **191** or other type of display device is also connected to the system bus **121** via a video interface **190**. A printer **196** or speakers **197** are connected to the system bus **121** via an output peripheral interface **195**. The system bus **121** may include a network interface **170** for connecting to a computer network (not shown).

With reference now to FIG. **4**, a radio frequency mass gauge (RFMG) measurement system **50** may include an eigenmode solver **52**, which is used to determine the eigenmodes and eigenfrequencies of a computer model of the tank **11** shown in FIG. **1**. The computer model of the tank **11** may be based on a computer aided design (CAD) model of the tank. The eigenmode solver **52** is a computer model, which solves for the resonant electromagnetic modes of a tank. The eigenmode solver **52** may solve for the resonant electromagnetic modes of a tank having simple or complex geometries. The eigenmode solver **52** may solve for the resonant electromagnetic modes of a tank, which is at least partially filled with a fluid having known or assigned values for dielectric constant, electrical conductivity, magnetic permeability, or index of refraction. Any of these known or assigned values may be inputs into the eigenmode solver **52**. The eigenmode solver **52** may be a commercially available electromagnetic computer simulation software package including, but limited to, the COMSOL RF simulation package available from COMSOL AB (also known as COMSOL, Inc. with an office at 1 New England Executive Park, Suite 350, Burlington, Mass., 01803). The eigenmode solver **52** determines the eigenmodes and eigenfrequencies of the computer model of the tank **11** at various fill levels. The eigenmode solver **52** may simulate the eigenmodes and eigenfrequencies of fluid fill levels of the tank **10** from about 0% fill level (empty) to about 100% fill level (full) in about 1% increments.

With continuing reference to FIG. **4**, the eigenmode solver **52** may simulate a set of electromagnetic eigenfrequencies **54** for each fluid fill level. Each fluid fill level may have multiple possibilities for the fluid configuration or distribution. In one embodiment, the fluid configuration or distribution is a normal settled liquid. In another embodiment, the fluid configuration or distribution is sloshing or splashing within the tank. Many other fluid configurations or distributions are possible. The eigenmode solver **52** may simulate a set of electromagnetic eigenfrequencies **54** for each fluid configuration or distribution at each fluid fill level. Each set of electromagnetic eigenfrequencies **54** may include any number of eigenmodes or eigenfrequencies chosen by one with ordinary skill in the art. For some non-limiting examples, the number of eigenmodes or modes can be 5, 10, 15, 20, 50, or 100. The eigenfrequencies in each simulated set of electromagnetic eigenfrequencies **54** can be broadened by a Gaussian function. In one embodiment, a plurality of sets of electromagnetic eigenfrequencies **56** includes one set of electromagnetic eigenfrequencies **54** for each fill level. In another embodiment, the plurality of sets of electromagnetic eigenfrequencies **56** includes one set of electromagnetic eigenfrequencies **54** for each fluid configuration at each fill level. The plurality of sets of electromagnetic eigenfrequencies **56** may be stored in a simulation matrix or database in an electronic data storage device **58**, as is well known in the art.

With reference now to FIGS. **5** and **6**, the RFMG measurement system **50** may include an eigenfrequency identifier algorithm **60**, which identifies a set of measured electromagnetic eigenfrequencies **62** in the frequency range of radio waves **43** received by the antenna **42**. The eigenfrequency identifier algorithm **60** may include a peak detection algorithm for identifying the peaks in the received range of radio waves **43**, or the return loss spectrum. For simplicity, the

inverted peaks in the received range of radio waves **43**, or the return loss spectrum, are referred to as peaks, as shown in FIG. **9**. The eigenfrequencies in the measured set of eigenfrequencies **62** can be broadened by a Gaussian function, and in one embodiment, the eigenfrequencies are broadened by a 1 MHz Gaussian function. In one embodiment, the eigenfrequency identifier algorithm **60** identifies a first set of electromagnetic eigenfrequencies **64** in the first range of radio waves **45** received by the first antenna **44**; and the eigenfrequency identifier algorithm **60** identifies a second set of electromagnetic eigenfrequencies **66** in the second range of radio waves **47** received by the second antenna **46**. The first measured set of electromagnetic eigenfrequencies **64** and the second measured set of electromagnetic eigenfrequencies **66** are combined or merged into a combined measured set of electromagnetic eigenfrequencies **68**. The measured set of eigenfrequencies **62** and the combined measured set of electromagnetic eigenfrequencies **68** may be stored in an electronic data storage device **58**, as is well known in the art. With reference to FIG. **11**, the simulated eigenmodes and the measure eigenmodes for several different fluid fill levels of the tank **11** are shown, according to one embodiment.

With reference now to all the FIGURES, the RFMG **50** operates by measuring the electromagnetic eigenfrequencies **62** of a tank **10**, and then compares those frequencies to a previously calculated matrix or database of frequencies at different fill levels **56** to find the best match at some fill level. The RFMG measurement system **50** may include a matching algorithm or a mass gauging algorithm **70**, which compares the measured set of eigenfrequencies **62**, or the combined measured set of electromagnetic eigenfrequencies **68**, to each simulated set of electromagnetic eigenfrequencies **54** in the plurality of simulated sets of eigenfrequencies **56**. The mass gauging algorithm **70** accepts the set of measured eigenfrequencies **62**, or the combined set of measured electromagnetic eigenfrequencies **68**, and the plurality of sets of simulated eigenfrequencies **56** as inputs. The mass gauging algorithm **70** then selects one set of simulated eigenfrequencies **54** from the from the plurality of simulated sets of eigenfrequencies **56** based upon a match between the measured set of eigenfrequencies **62**, or the combined measured set of electromagnetic eigenfrequencies **68**, and a simulated set of eigenfrequencies **54**. The mass gauging algorithm **70** then determines the fluid fill level of the tank **10** based upon the matched or selected set of simulated eigenfrequencies **54**.

With continuing reference to all the FIGURES, the mass gauging algorithm **70** may include a correlation function **72**:

$$g_m(\phi_j)=\int\Omega\cdot\eta\Psi_j df \tag{1}$$

where the subscript m indicates the number of eigenmodes in the plurality of simulated sets of eigenfrequencies **56**; ϕ_j is the simulated fill level of the tank ranging from about 0% to about 100%; Ω is an array that contains the set of measured eigenfrequencies **62** broadened by a Gaussian function; η is a correction factor to account for the differences in eigenfrequencies between the actual tank **10** and the computer model of the tank **11**; and ψ_j is the plurality of simulated sets of simulated eigenfrequencies **56**. A peak in the correlation function indicates a good match between the measured eigenfrequencies **62** and the simulated eigenfrequencies **54** for a specific fill level, as shown in FIGS. **10***a*, **10***b*, and **10***c*.

With continuing reference to all the FIGURES, the scaling of the tank eigenfrequencies with tank size and fluid index of refraction will now be discussed. Generally, the frequency of the lowest mode of a tank is given by the speed of light divided by a characteristic dimension of the tank. For tank with a characteristic size of 1 m, the lowest eigenfrequency is roughly 300 MHz. Adding dielectric fluid to the tank slows the speed of electromagnetic wave propagation, and the characteristic eigenfrequencies decrease. Completely filling a tank with a dielectric liquid (such as liquid oxygen) slows the speed of light everywhere in the tank to c/n, where c is the speed of light in vacuum and n is the index of refraction of the fluid at radio frequencies. The eigenfrequencies of the full tank f_i^{full} are related to the empty tank eigenfrequencies f_i^0 by the expression:

$$f_i^{full}=f_i^0/n. \tag{2}$$

From this expression (2), we find that the expected frequency shift of a mode between empty and full conditions is:

$$\Delta f_i^{0-full}=f_i^0(1-1/n). \tag{3}$$

At intermediate fill levels, the frequency shift is not a linear interpolation of expression (3) and so it is necessary to use an eigenmode solver to calculate the eigenfrequencies at various fill levels and liquid orientations within the tank.

With continuing reference to all the FIGURES, the RF modes of a tank are excited by coupling an appropriate RF source signal to the tank using an antenna. In one embodiment, the RF electronics **90** measures the reflected RF power, which is a minimum at a tank resonance provided there is good antenna-tank coupling for that particular mode. When the antenna is excited at a frequency that does not correspond to a tank eigenfrequency, a small fraction of power is transmitted into the tank and instead the power is reflected back to the source, or the RFMG electronics unit **90**. Although one antenna is all that is needed to perform a gauging measurement, the use of two antennas offers a level of redundancy and enables the detection of more modes, which may lead to more accuracy. The measurement frequency range of interest is governed by a lower and upper frequency. The lower frequency is generally determined by the lowest mode (i=1) frequency expected when the tank is full of liquid, f_i^{full}. The upper frequency may be determined as the frequency above which the mode density becomes too high to readily distinguish which peak in the measured spectrum corresponds to which mode from the simulations. As stated above, the inverted peaks in the return loss spectrum, or the received range of radio waves **43**, are referred to as peaks.

With continuing reference to all the FIGURES, the RF power required to excite and detect the eigenmodes will now be discussed. In one embodiment, the RF power level used with the test tank **10** shown in FIG. **1** was 1 mW. The power per unit volume times the mode quality factor, Q, may be used to achieve similar values for the magnitude of the electric, or magnetic, field that exists in the tank. For the non-limiting example of the test tank **10**, the quality factor Q of a typical mode with a good signature in the reflection spectrum (low reflection) is around 1,500 for an empty tank. Thus, the test tank **10** has the power density value of:

$$\frac{P_{RF}\cdot Q}{V_{TANK}}=\frac{1\text{ mW}\cdot 1{,}500}{1.6\text{ m}^3}\approx 1\text{ W/m}^3 \tag{4}$$

The empty tank quality factor is expected to scale as $Q=2V_{TANK}/(S\delta)$ where S is the surface area of the tank walls and δ is the skin depth. Other loss factors may affect the quality factor Q, such as absorption in the fluid. In the absence of other such loss factors, equation (4) proposes that the tank surface area and skin depth δ are the important scaling factors, in addition to the input power P_{RF}, for determining the characteristic field level within the tank.

Numerous embodiments have been described, hereinabove. It will be apparent to those skilled in the art that the above methods and apparatuses may incorporate changes and modifications without departing from the general scope of this invention. It is intended to include all such modifications and alterations in so far as they come within the scope of the appended claims or the equivalents thereof.

Having thus described the invention, it is now claimed:

1. A method for measuring the quantity of fluid in a tank comprising the steps of:

simulating a plurality of sets of electromagnetic eigenfrequencies of the tank for a range of fill levels using an electromagnetic eigenmode solver algorithm, wherein each simulated set of electromagnetic eigenfrequencies represents a specific fill level within the tank;

inputting the simulated plurality of sets of electromagnetic eigenfrequencies into a computer database;

transmitting a first range of radio waves using a transmitting device located inside the tank;

receiving the first range of radio waves using a receiving device located inside the tank;

identifying a measured set of electromagnetic eigenfrequencies in the first range of radio waves using an eigenfrequency identifier algorithm;

comparing the measured set of electromagnetic eigenfrequencies to the simulated plurality of sets of electromagnetic eigenfrequencies;

selecting a match between the measured set of electromagnetic eigenfrequencies and the simulated plurality of sets of electromagnetic eigenfrequencies using a matching algorithm, wherein the match is one simulated set of electromagnetic eigenfrequencies from the simulated plurality of sets of electromagnetic eigenfrequencies;

determining the fill level of the tank based upon the match.

2. The method of claim **1** wherein each simulated set of electromagnetic eigenfrequencies represents a specific fluid configuration at a specific fill level within the tank, and wherein the fluid has at least one fluid configuration at each specific fluid fill level of the tank.

3. The method of claim **1** wherein the tank further comprises a metal liner.

4. The method of claim **1** wherein the tank is formed of metal.

5. The method of claim **1** wherein before the step of transmitting a first range of radio waves, the method further comprises the step of:

placing the tank in a low gravity environment.

6. The method of claim **1** wherein an antenna comprises the transmitting device.

7. The method of claim **1** wherein an antenna comprises the receiving device.

8. The method of claim **1** wherein the fluid is a dielectric fluid.

9. The method of claim **1** wherein the fluid is a cryogenic propellant.

10. The method of claim **1** wherein the eigenfrequency identifier algorithm includes a peak-detection algorithm for identifying the peaks in the first range of radio waves.

11. The method of claim **1** wherein a single antenna comprises the transmitting device and the receiving device.

12. The method of claim **1** wherein the matching algorithm includes a correlation function for determining the match between the measured set of electromagnetic eigenfrequencies and the one simulated set of electromagnetic eigenfrequencies.

13. The method of claim **1** wherein the range of fill levels is from about 0% to about 100%.

14. The method of claim **1** wherein the step of simulating a first set of electromagnetic eigenfrequencies further comprises simulating the first set of electromagnetic eigenfrequencies for the range of fill levels in about 1% increments.

15. A method for measuring the quantity of fluid in a tank comprising the steps of:

simulating a plurality of sets of electromagnetic eigenfrequencies of the tank for a range of fill levels using an electromagnetic eigenmode solver algorithm, wherein each simulated set of electromagnetic eigenfrequencies represents a specific fill level within the tank;

inputting the simulated plurality of sets of simulated electromagnetic eigenfrequencies into a computer database;

transmitting a first range of radio waves using a first transmitting device located inside the tank;

receiving the first range of radio waves using a first receiving device located inside the tank;

identifying a first measured set of electromagnetic eigenfrequencies in the first range of radio waves using an eigenfrequency identifier algorithm;

transmitting a second range of radio waves using a second transmitting device located inside the tank;

receiving the second range of radio waves using the second receiving device located inside the tank;

identifying a second measured set of electromagnetic eigenfrequencies in the second range of radio waves using an eigenfrequency identifier algorithm;

combining the first measured set of electromagnetic eigenfrequencies with the second measured set of electromagnetic eigenfrequencies into a combined measured set of electromagnetic eigenfrequencies;

comparing the combined measured set of electromagnetic eigenfrequencies to the simulated plurality of sets of electromagnetic eigenfrequencies;

selecting a match between the combined measured set of electromagnetic eigenfrequencies and the simulated plurality of sets of electromagnetic eigenfrequencies using a matching algorithm, wherein the match is one simulated set from the simulated plurality of sets of electromagnetic eigenfrequencies;

determining the fill level of the tank based upon the match.

16. The method of claim **15** wherein a first antenna comprises the first transmitting device and the first receiving device, and wherein a second antenna comprises the second transmitting device and the second receiving device.

17. The method of claim **15** wherein the step of simulating a plurality of sets of electromagnetic eigenfrequencies further comprises simulating the plurality of sets of electromagnetic eigenfrequencies for the range of fill levels from about 0% to about 100% in about 1% increments.

18. An apparatus for measuring a quantity of fluid comprising:

a tank;

a simulator device comprising an eigenmode solver computer algorithm for simulating a plurality of sets of electromagnetic eigenfrequencies of the tank for a range of fill levels, wherein each simulated set of electromagnetic eigenfrequencies represents a specific fill level within the tank;

an electronic data storage device for storing the simulated plurality of sets of electromagnetic eigenfrequencies;

a transmitter device located inside the tank for transmitting a first range of radio waves;

a receiver device located inside the tank for receiving the first range of radio waves;

an identifier device comprising an eigenfrequency identifier computer algorithm for identifying a measured set of electromagnetic eigenfrequencies in the first range of radio waves;

a comparer device for comparing the measured set of electromagnetic eigenfrequencies to the simulated plurality of sets of electromagnetic eigenfrequencies;

a selector device for selecting a match between the measured set of electromagnetic eigenfrequencies and the simulated plurality of sets of electromagnetic eigenfrequencies using a matching computer algorithm, wherein the match is one simulated set from the simulated plurality of sets of electromagnetic eigenfrequencies; and

a determiner device for determining the fill level of the tank based upon the match.

19. The method of claim **18** wherein the tank further comprises a metal liner.

20. The method of claim **18** wherein an antenna comprises the transmitting device and the receiving device.

* * * * *