US008163243B1

(12) **United States Patent**
Burke

(10) **Patent No.: US 8,163,243 B1**
(45) **Date of Patent: Apr. 24, 2012**

(54) **ZERO-G CONDENSING HEAT EXCHANGER WITH INTEGRAL DISINFECTION**

(75) Inventor: **Kenneth A. Burke**, Chardon, OH (US)

(73) Assignee: **The United States of America as represented by the Administrator of National Aeronautics and Space Adminstration**, Washington, DC (US)

(*) Notice: Subject to any disclaimer, the term of this patent is extended or adjusted under 35 U.S.C. 154(b) by 669 days.

(21) Appl. No.: **11/517,555**

(22) Filed: **Sep. 7, 2006**

(51) **Int. Cl.**
A62B 7/08 (2006.01)
B01J 19/08 (2006.01)
B01D 19/00 (2006.01)

(52) **U.S. Cl.** **422/120**; 422/186.07; 422/186.11; 95/261

(58) **Field of Classification Search** .. 422/186.07–186.2, 422/120; 95/261
See application file for complete search history.

(56) **References Cited**

U.S. PATENT DOCUMENTS

4,416,747	A	11/1983	Menth et al.	
5,392,694	A *	2/1995	Muller et al.	99/295
5,676,911	A	10/1997	Baumert et al.	
5,855,856	A *	1/1999	Karlson	422/186.11
6,036,746	A	3/2000	Scovazzo et al.	
6,497,749	B2	12/2002	Kesten et al.	
6,635,104	B2	10/2003	Komkova et al.	
6,652,816	B2	11/2003	Hwang	
6,752,970	B2	6/2004	Schwartz et al.	
6,805,798	B2 *	10/2004	Kerfoot	210/620
6,997,185	B2 *	2/2006	Han et al.	128/204.17
2003/0039729	A1 *	2/2003	Murphy et al.	426/320

* cited by examiner

Primary Examiner — Kevin Joyner
(74) *Attorney, Agent, or Firm* — Robert H. Earp, III

(57) **ABSTRACT**

The system that operates in a zero gravity environment and has an integral ozone generating capability is disclosed. The system contributes to the control of metabolic water vapors in the air, and also provided disinfection of any resulting condensate within the system, as well as disinfection of the air stream that flows throughout the disclosed system.

18 Claims, 7 Drawing Sheets

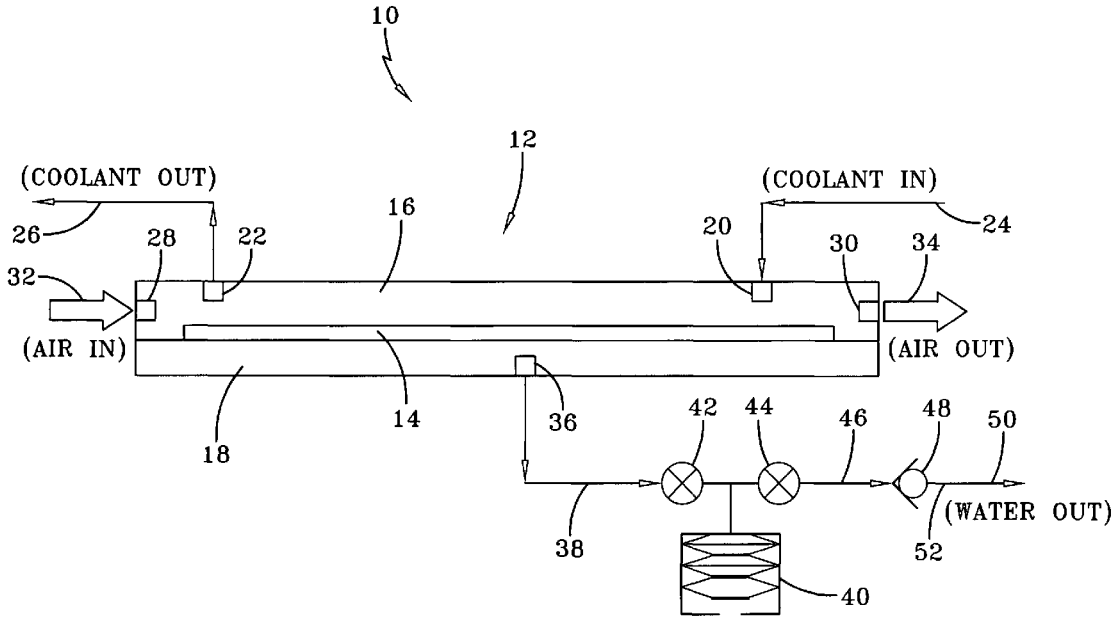

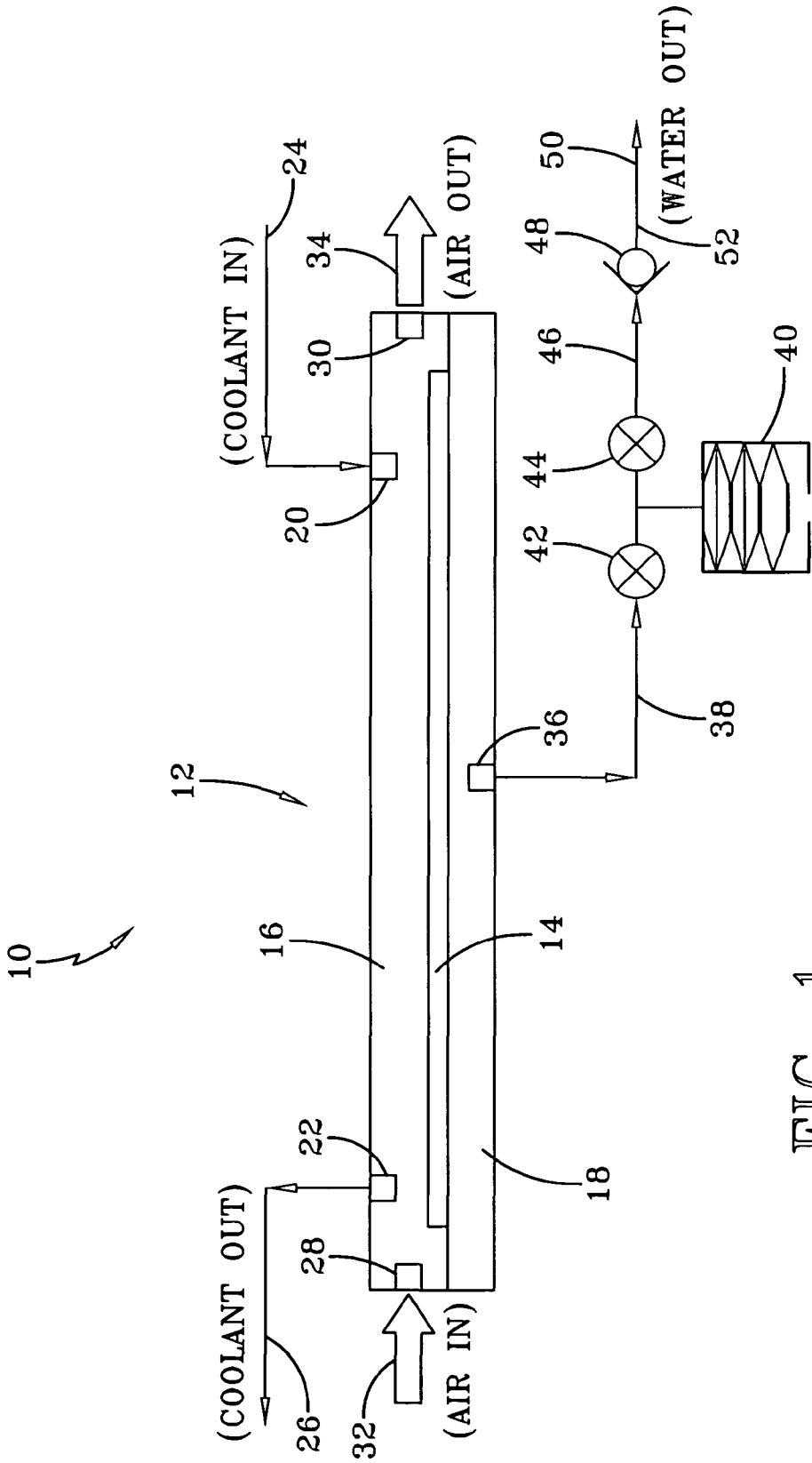
10
12
14
16
18
20
22
24
26
28
30
32
34
36
38
40
42
44
46
48
50
52
(COOLANT IN)
(COOLANT OUT)
(AIR OUT)
(AIR IN)
(WATER OUT)

FIG-1

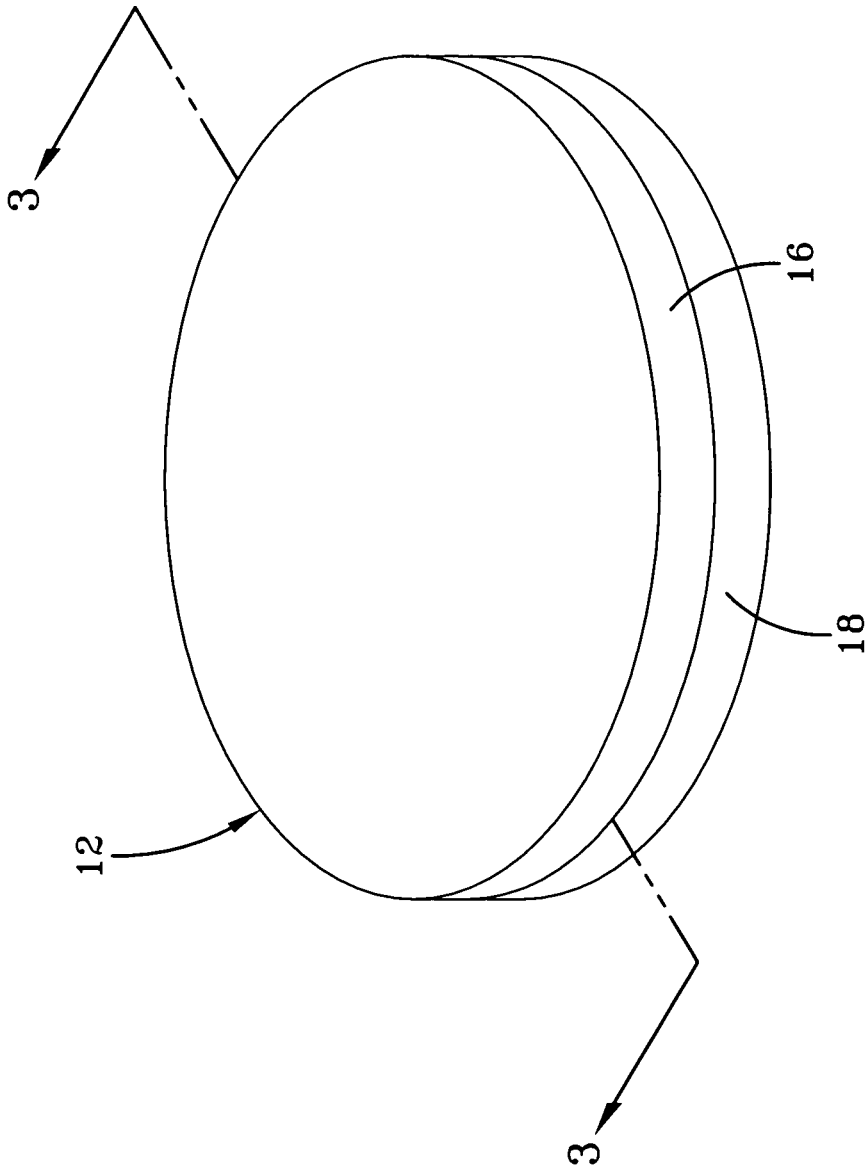

FIG-2

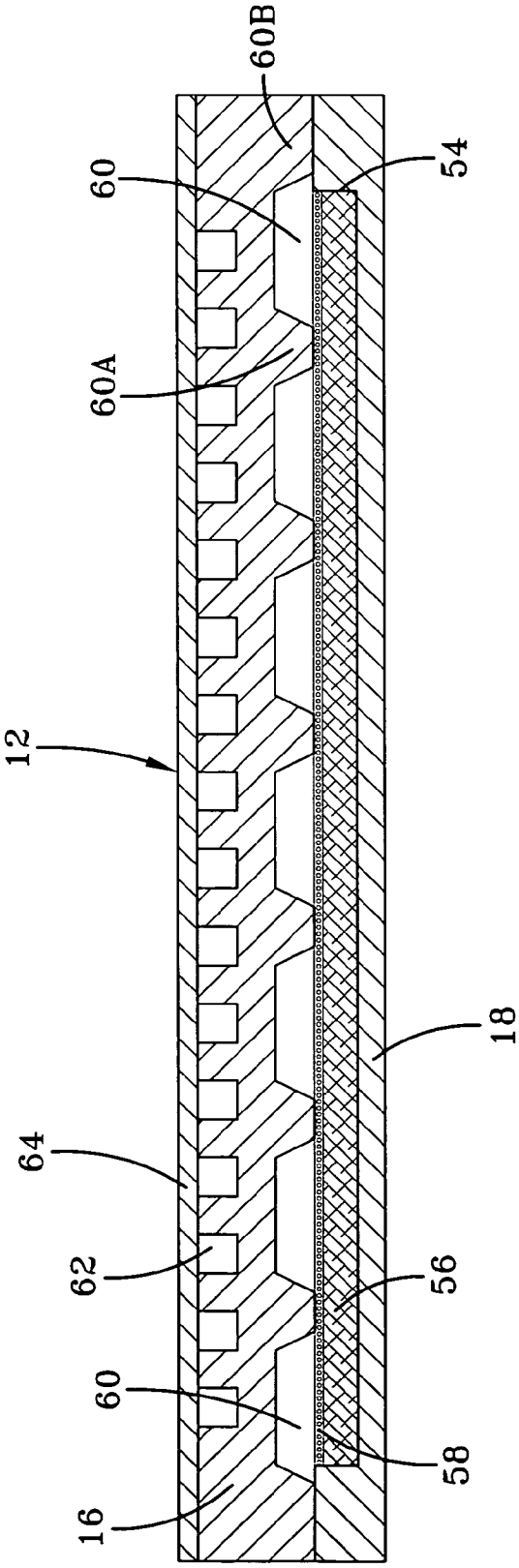

FIG-3

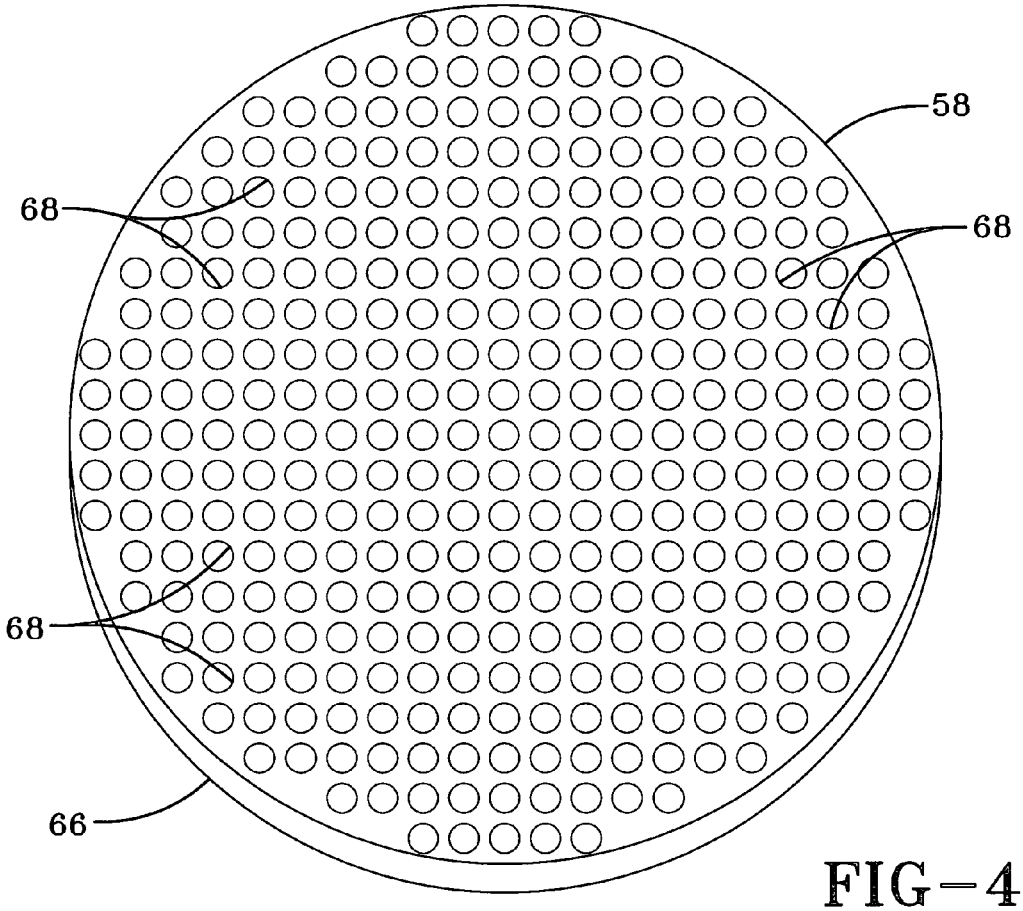
58
68
68
68
66

FIG-4

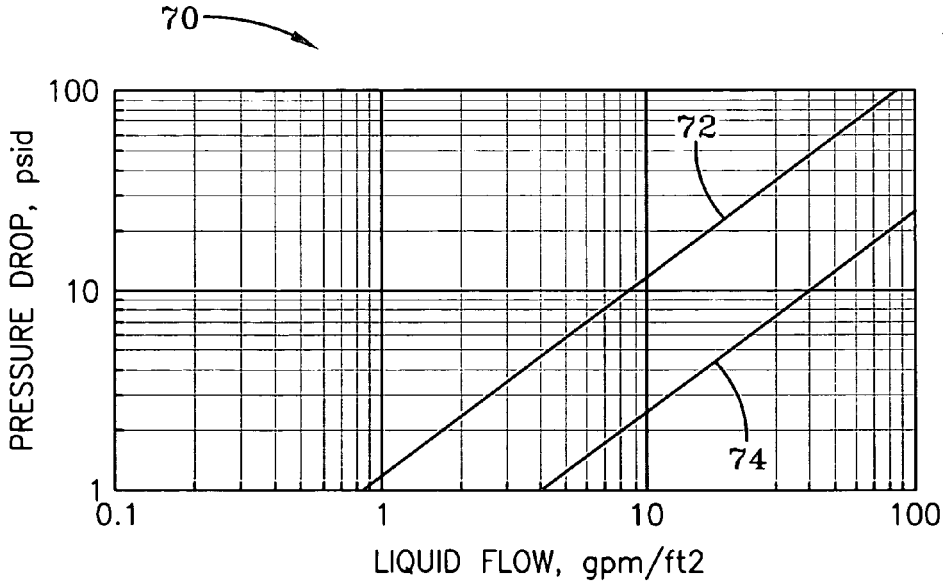
70
100
10
1
PRESSURE DROP, psid
0.1
1
10
100
LIQUID FLOW, gpm/ft2
72
74

FIG-5

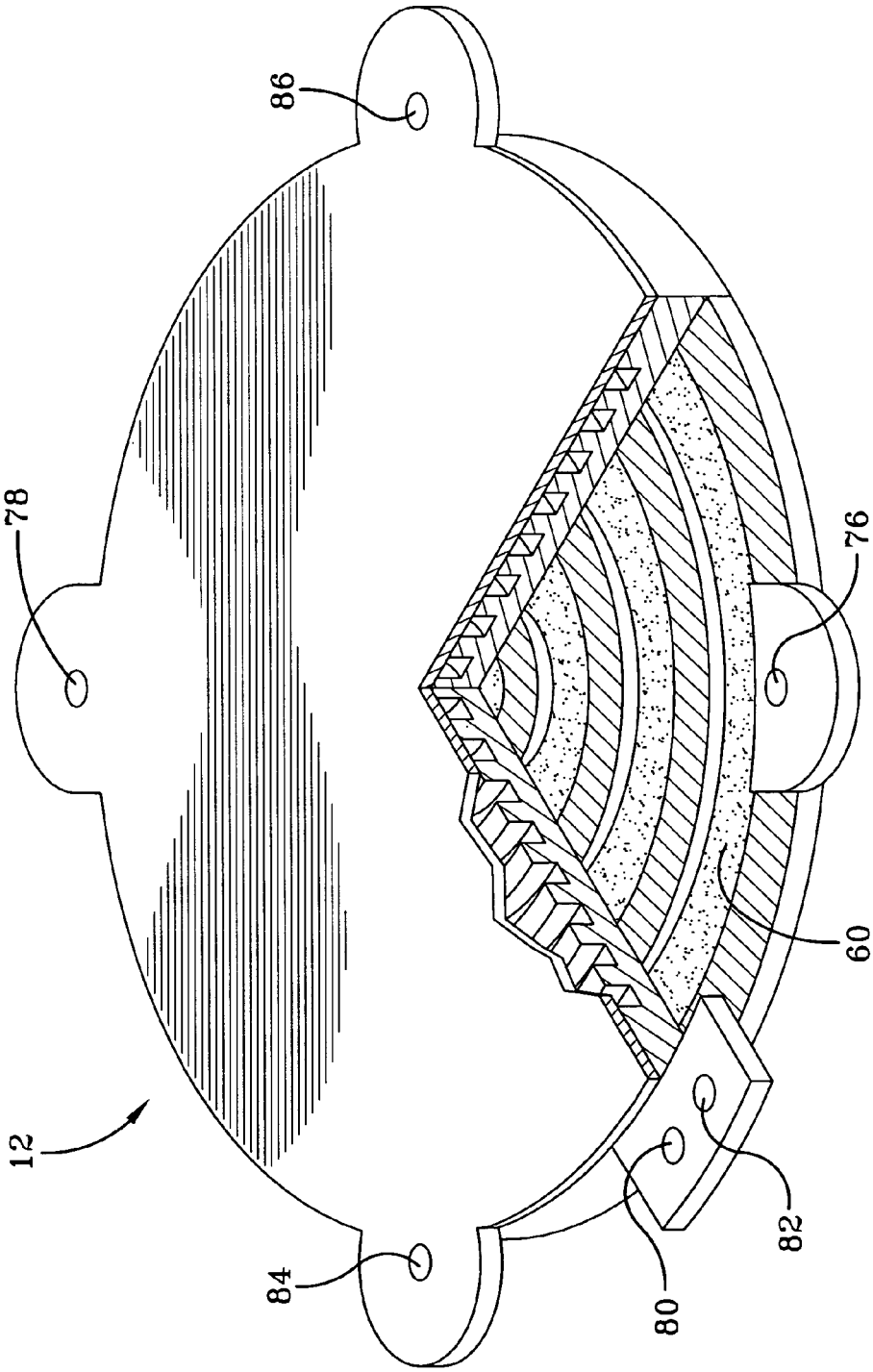

FIG-6

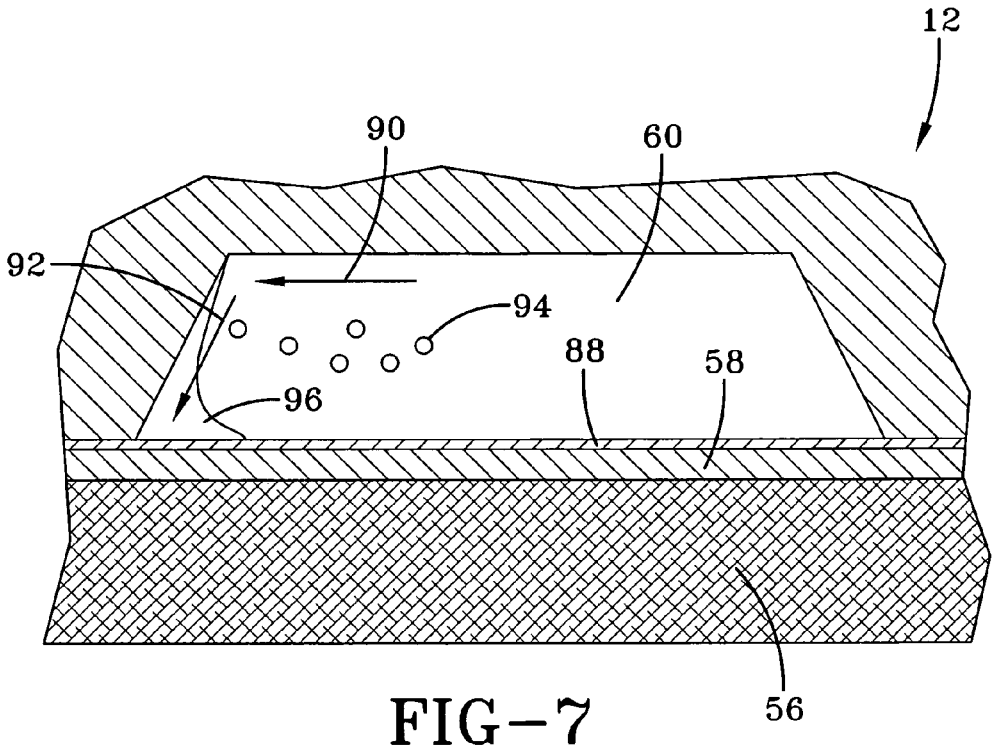

FIG-7

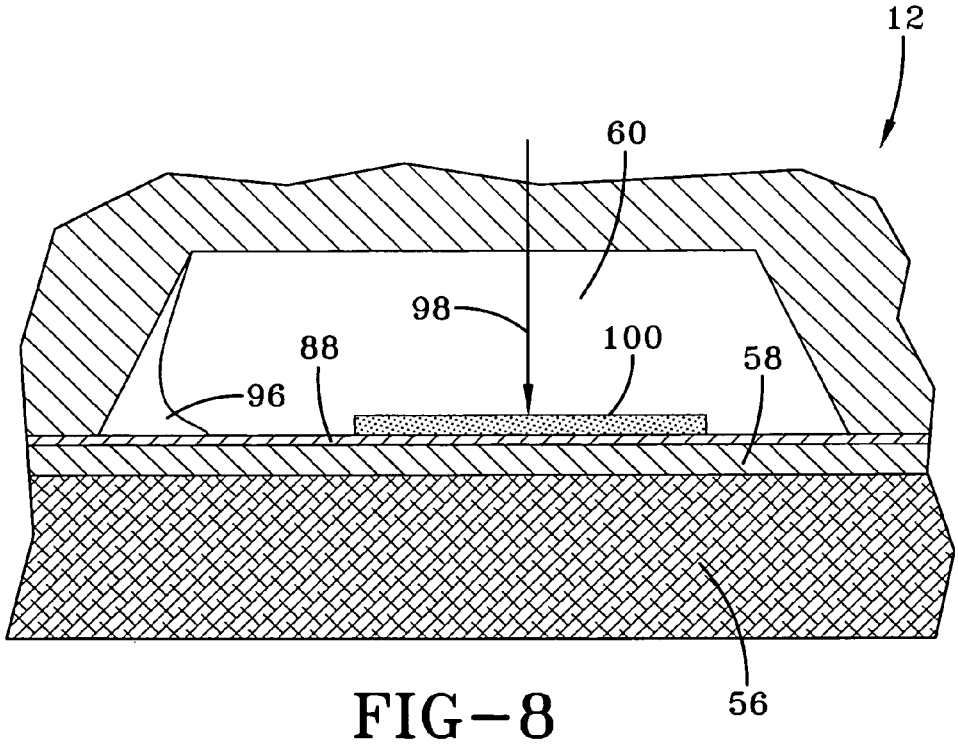

FIG-8

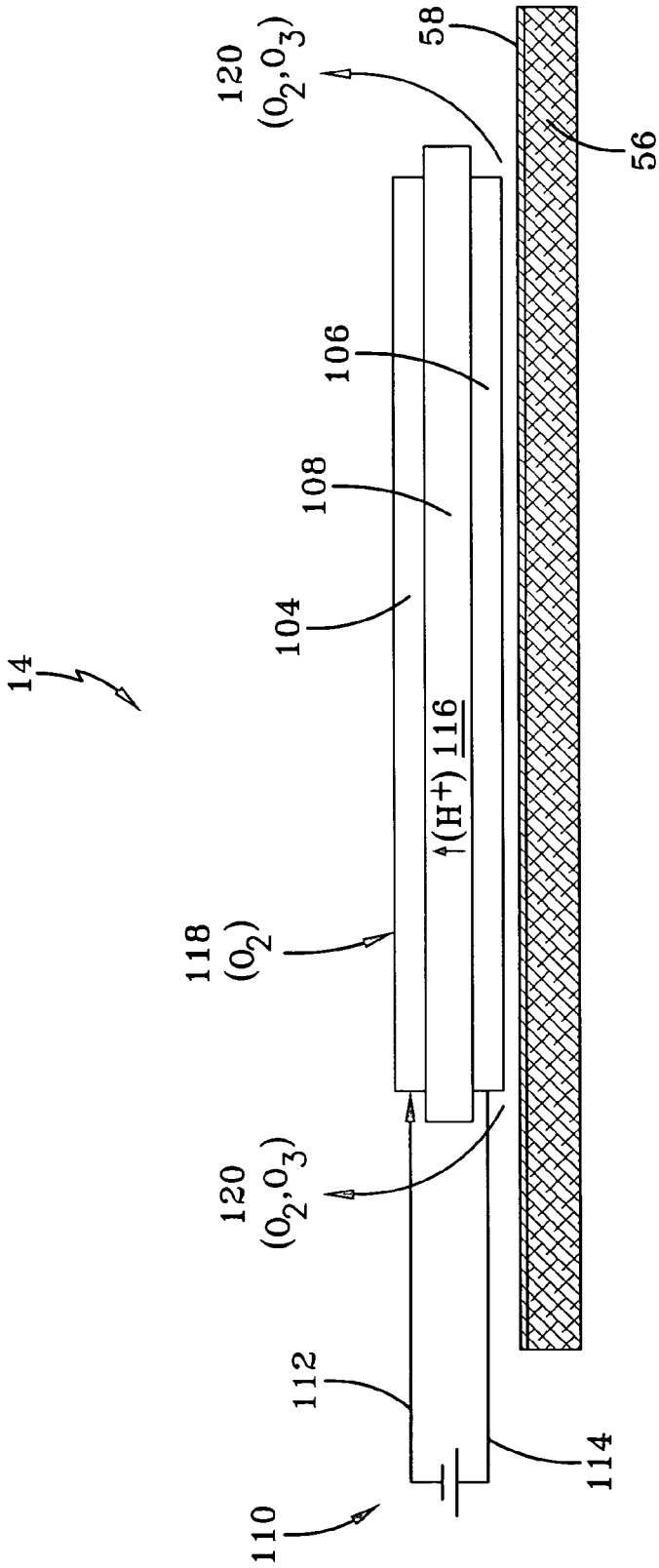

FIG—9

ZERO-G CONDENSING HEAT EXCHANGER WITH INTEGRAL DISINFECTION

The invention described herein was made by an employee of the United States Government and may be used by or for the Government for governmental purposes without payment of any royalties thereon or therefor.

FIELD OF THE INVENTION

The invention relates to a heat exchanger. Specifically, the invention is a system that provides condensing, cooling, filtering, humidifying and disinfecting for selected environments and is particularly suited to supply life support for astronauts that includes the treatment and revitalization of the air that the astronauts breath. The system provides an ozone generator to correct for air contamination problems encountered in closed environments, such as in the space capsule or planetary outposts, but also encountered in commercial and terrestrial applications. The system improves the quality of air people breath, which has become an important health issue.

BACKGROUND OF THE INVENTION

Life support for astronauts includes the treatment and revitalization of the air that the astronauts breathe. Part of the revitalization is the removal of the excess water vapor from the air. This excess water vapor is a result of the natural metabolic production of water, and it is exhausted into the air by the astronaut's respiration and perspiration. The condensation of water in zero gravity and its separation from the remaining gaseous phase while in a zero gravity environment is technically challenging and requires a solution. In addition to the condensing and gas/liquid separation problem, there is the problem of biological fouling of the condensing/separation mechanism, being employed as part of the life support system, due to deposition and subsequent growth by microorganisms on the condensing surface of the condensing/separation mechanism. Not only does this fouling potentially reduce the effectiveness of the condenser/separator, but also represents a contamination point for the astronauts' water system.

The problem of condensing the water vapor from humidity laden air in a zero gravity environment is very similar to the problem of removing the liquid water from a two-phase fuel cell gas circulation stream. Several solutions to the fuel cell problem have been implemented and include: centrifugal separators, porous media, and membrane separators.

Centrifugal separators (both rotating and non-rotating) operate by imparting an acceleration to water droplets, and since the water drops are denser than the surrounding gas, they are "spun" separated from the gas being treated by the centrifugal separators. If the centrifugal separators are rotating, they consume power, if non-rotating their operation is flow rate dependent. The centrifugal separators are also most susceptible to dry-out conditions. However, the centrifugal separators are the least susceptible, compared to the porous media and membrane support, to fouling or plugging because the treated water does not get squeezed through tiny pathways found in porous media and membrane support devices. Scaling, that is adapting the centrifugal separators to different applications, is the most difficult of the three different type solutions.

Porous media (sintered metal, plastic or ceramic particles) operate by absorbing the condensate on a surface of interest, and by a combination of capillary forces and bulk pressure differential to transfer of water from a higher pressure gas/liquid side to a lower pressure liquid only side. The materials (sintered metal, plastic or ceramic particles) must be either inherently hydrophilic or treated to make them hydrophilic in order for a required absorption process to work. These porous media separators are considerably thicker than membrane separators, and therefore are far more resistant to water flow. This means that these separators must be sized larger, or have a greater delta P, known in the art, for driving the water through the separators than that required for membrane technique. However, the porous media technique scales easily, but unfortunately is susceptible to fouling. Furthermore, the porous media devices are generally much heavier than typical membranes, but are easily shaped into different geometries (cylindrical, planar, etc.).

Membrane separators (hydrophobic, hydrophilic, or both in combination) are very similar to the porous technique employing porous media for removing water from a two-phase fuel cell gas, but are far less flow restrictive, and therefore can be made much smaller/lighter for a given water removal rate. The membrane separator can be made to operate with low delta P. The membrane separators also scale easily, but also foul just as easily as porous media. Advantageously, the membrane separators can be made into pleated cylindrical or planar geometries. The hydrophobic type of the membrane separators operate by allowing gas to flow through the hydrophobic membrane, but not liquid. Conversely, the hydrophilic type of membrane separators allow liquid to pass, but not gas. These hydrophilic membranes are typically plastic, but sometimes are thin deposited layers of either metals, plastics or ceramics on a thicker supporting substrate. It is desired to incorporate the beneficial features of the hydrophilic membrane and centrifugal separators into a system that corrects for the problem of condensing water vapor from humidity laden air in a zero gravity environment. It is further desired to provide a system that provides purifying, condensing, filtering and humidifying functions for the Zero-G life support system for astronauts, as well as for home and office building air conditioning apparatuses, airplane air systems, automobile air systems, room humidifiers and room air cleaners.

OBJECTS OF THE INVENTION

It is an object of the present invention to provide a system for condensing, cooling, filtering, humidifying, and disinfecting selected environments, and is particularly suited for supplying life support for astronauts, including the treatment and revitalization of the air that the astronauts breathe in a zero gravity environment.

It is another object of the present invention to provide a system having an ozone generator that produces ozone at the surface of the condenser of the system, thereby disinfecting the condensed water, as well as disinfecting the air stream impacting the condensing surface.

Further, it is an object of the present invention to provide a system whereby the thermal path length between the coolant and air stream channels within the system is minimized, which, in turn, minimizes the temperature differential between the coolant and the air stream and, accordingly, improves the efficiency of the system itself.

Still further, it is an object of the present invention to provide a planar flow geometry for the air stream within the system and to provide turbulence for the flow path which assists in moving water droplets from the air being treated in

a manner similar to that of a centrifugal separator, as well as removing heat from the air stream.

SUMMARY OF THE INVENTION

The invention is directed to a system for condensing, cooling, filtering, humidifying and disinfecting selected environments. The system comprises a) a cavity capable of holding water and occupied by a support screen having an upper surface; b) hydrophilic membrane arranged on the upper surface of the support screen; c) a plurality of adjacent and interconnected air channels formed in a material of relatively high thermal conductivity and relatively low density. The plurality of air channels are arranged to cover the hydrophilic membrane. The system further comprises (d) a plurality of adjacent and interconnected coolant cavities formed in the material having the relatively high thermal conductivity and the low density and arranged above the plurality of air channels; and (e) an ozone generator arranged in at least one of the air channels and located over the hydrophilic membrane.

BRIEF DESCRIPTION OF THE DRAWINGS

The features and the advantages of the invention, as well as the invention itself, will be better understood with reference to the following description when considered in conjunction with the accompanied drawings, where like reference numbers designate identical corresponding parts thereof and wherein:

FIG. **1** is a block diagram of the system of the present invention;

FIG. **2** illustrates one embodiment of the present invention being a circular arrangement of the planar air/water separator of the system of the present invention;

FIG. **3** is a cross-sectional, view taken along line **3-3** of FIG. **2**, of the planar air/water separator;

FIG. **4** illustrates the hydrophilic membrane of the present invention;

FIG. **5** illustrates a family of curves showing, among other things, a pressure drop liquid flow characteristic of the hydrophilic membrane of FIG. **4**;

FIG. **6** is cut-way view of the planar air/water separator of the present invention;

FIG. **7** is a cross-sectional view of the planar air/water separator of the present invention, particularly showing one of the features of the present invention of water droplets being spun outward and toward the hydrophilic membrane of the present invention;

FIG. **8** is a cross-sectional view of the planar air/water separator of the present invention, illustrating an ozone layer generated by the ozone generator of the present invention that eliminates the biological growth on the hydrophilic membrane of the present invention so as to disinfect the condensate and purifying the air stream with the system of the present invention; and

FIG. **9** is a cross-sectional view of the electrochemical ozone generator of the present invention.

DETAILED DESCRIPTION OF THE PREFERRED EMBODIMENTS

Referring to FIG. **1**, there is shown a block diagram of the system **10** of the present invention for condensing, cooling, filtering, humidifying, and disinfecting selected environments and is particularly suited for the treatment and revitalization of air that astronauts breathe in a zero gravity environment condition. Further, the system **10** may be advantageously utilized for a large variety of applications, such as for home and office buildings air conditioning systems, airplane air systems, automotive air systems, room humidifiers and room air cleaners. The system **10** comprises an air/water separator **12** and an ozone generator **14**. The air/water separator **12** comprises an upper housing **16** and a lower housing **18**.

The upper housing **16** has provisions **20** and **22**, known in the art, for respectively receiving a coolant input **24** and for transporting a coolant output **26**. Further, the upper housing **16** has provisions **28** and **30**, known in the art, for respectively receiving air input **32** and for transporting air output **34**. The lower housing **18** has provisions **36**, known in the art, so as to transport and remove water therefrom along a water path or side **38**.

As will be further discussed, the pressure head of the air stream within the air/water separator is relatively low. Accordingly, it is desired to provide suction on the water side **38** of the lower housing **18**, so as to move condensate through the air/water separator **12** and into the water path **38**. The suction may be applied by a spring loaded bellows **40**. Solenoid valves **42** and **44** are preferably provided to isolate the system **10**, during the filling and emptying operations of the system **10**. The water path **38** passes through the solenoids **42** and **44** and into water line **46**, which, in turn, passes through valve **48** onto line **50** and is shown in FIG. **1** as water out **52**. The air/water separator **12** may be further described with reference to FIG. **2**.

The air/water separator **12** may have any shape that conforms to the application being used. For example, for the embodiment of FIG. **2**, the air/water separator **12** has a curved configuration and partially shows the upper and lower housing **16** and **18** respectively. The air/water separator **12**, may be further described with reference to FIG. **3**, taken along lines **3-3** of FIG. **2**, and showing a cross-sectional view of the planar air/water separator **12**.

The planar air/water separator **12** comprises a cavity **54** capable of holding water and which is occupied by a water cavity support screen **56**, known in the art. A hydrophilic membrane **58** is arranged on the upper surface of the water cavity support screen **56**.

The air/water separator **12**, in particular, the upper housing **16** is dimensioned, so as to provide for plurality of adjacent and interconnected air channels **60** therein, all in fluid communication with each other. The plurality of air channels **60** are arranged to cover the hydrophilic membrane **58**. The upper housing **16** is further dimensioned so as to provide for a plurality of adjacent and interconnected coolant cavities **62** therein, which are in fluid communication with each other. The upper housing **16** is further provided with a cover **64** that is placed over the plurality of coolant cavities **62**.

The air/water separator **12** has a planar flow geometry for the air stream and is capable of being stacked or arranged, as shown in FIG. **3** in a side-by-side manner, to allow for easy scaling of the system **10**. More particularly, the number of air channels **60** and coolant cavities **62** may be selected to adapt the air/water separator **12** to the air circulation requirements for the various applications, such as home and office building air conditioning systems, airplane air systems, automobile air systems, room humidifiers and room air cleaners.

The upper housing **16** is selected to be of a relatively high thermal conductive material that also has a relatively low density, so as to minimize mass. The material may be selected from the group comprising aluminum, magnesium, titanium, metal filled or carbon filled plastics, and high thermal conductivity carbon composites. Other materials can also be used wherein the properties of the materials are selected to only

effect the mass and temperature of the coolant. It is not essential to the principles of the invention that only certain materials be used.

The selection of the material for the upper housing **16** allows the air stream flow in the air channels **60** to be provided with a thermal path, between the coolant in cavities **62** and the air channels **60**, which is minimized or reduced, which, in turn, minimizes the temperature differential between the coolant and the air streams, so as to enhance the overall efficiency of the air/water separator **12**, which, in turn, enhances the overall efficiency of the system **10**. The upper housing **16** acts essentially as a liquid/air heat exchanger. The hydrophilic membrane **58**, located below the air channels **60**, may be further described with reference to FIG. **4**.

FIG. **4** shows the hydrophilic membrane **58** as having a circular shape, microscopic-sized accommodating the embodiment of FIG. **2**, a thickness **66** and a plurality of microscopic-sized pores **68**. The pores **68** are shown in FIG. **4** as being circular for the sake of clarity, but in actuality the pores **68** are irregular shaped and act as passageways through a tangled web of polymer fibers that are also highly irregular in shape. The hydrophilic membrane **58** is commercially available and its pores size is selected to minimize the pressure drop of water transported through the hydrophilic membrane **58**, yet has a sufficient bubble pressure to provide robust resistance to gas flow through the membrane **58**. The hydrophilic membrane **58** may be of a plastic material having a thickness **66** of 0.0052 inches, and having a nominal pore size rating of 0.8μ. The selection of hydrophilic membrane **58** allows for minimization of both size and mass. The plastic hydrophilic membrane **58** also has a bubble point, given in pounds/square inch differential psid, of about 15. The benefits of the plastic hydrophilic membrane **58** relative to a prior art stainless steel membrane may be further described with reference to FIG. **5**.

FIG. **5** shows a family of curves **70** illustrating the response of a stainless steel sinter membrane and a plastic membrane of the liquid flow, given in gallons per minute per square foot (gpm/ft^2), vs. pressure drop common given in psid. The family of curves **70** include responses **72** and **74**, which are respectively those of a stainless steel sinter membrane and the plastic membrane **58**. The stainless steel sinter is of a medium grade: 0.2μ, has a thickness of 0.039 inches, and a bubble point, given in inches of mercury (in Hg) of 5-6.9. A comparison between the two responses **72** and **74** reveals that the plastic membrane **58** of response **74** offers greater flow at the same delta P or less delta P at the same flow. Delta P is the pressure difference between two sides of the membrane **58**. Delta P is sometimes referred to as differential pressure. Further, the plastic membrane associated with response **74** is thinner, lighter and has a much higher bubble pressure relative to the stainless steel sinter membrane related to response **72**. The plastic membrane **58** may be used in condensing heat exchangers and in air conditioners of any capacity. The air/water separator **12** housing the plastic hydrophilic membrane **58**, may be further described with reference to FIG. **6**, which is a cut-away view of the planar air/water separator **12**.

FIG. **6** shows input and output manifolds **76** and **78**, which are part of the provisions **20** and **22**, previously mentioned with reference to FIG. **1**, input and output manifolds **80** and **82**, which are part of the provisions **28** and **30**, previously mentioned with reference to FIG. **1**, and common water manifolds **84** and **86**, which are part of the provisions **36**, previously mentioned with reference to FIG. **1**.

FIG. **6** also illustrates the plurality of adjacent and interconnected coolant cavities **62**, all having fluid communication therebetween and arranged in a side by side manner. Further, FIG. **6** illustrates, for one embodiment, a spiral pattern of the air channels **60**, all interconnected to provide communication therebetween. The spiral pattern creates radial acceleration of the air flow that assists in the separation of the water droplets from the air flow, to be further described hereinafter. Some of the benefits provided by the air/water separator **12**, may be further described with reference to FIG. **7**, which is a cross-sectional view of the planar air/water separator **12**.

FIG. **7** illustrates, in a general outline, one of the air cavities **60**, which is positioned over part of the hydrophilic membrane **58**, which has a film **88** thereon. FIG. **7** further illustrates a horizontal directional arrow **90**, and a vertical directional arrow **92**, both of arrows **90** and **92** being associated with a plurality of water droplets **94**.

As seen in FIG. **7**, the water droplets **94** are "spun" outward, as indicated by directional arrow **90** and toward, as indicated by directional arrow **92**, the hydrophilic membrane **58** resulting in a peaked shape fluid portion **96**, shown in FIG. **7**.

The air channels **60** provide changes in a direction of the flow path within the air channels **60** that imparts acceleration, which assists in separating water droplets **94**, as shown in FIG. **7**. Changes in the width and depth of the air channels **60**, known in the art to create turbulence, also imparts acceleration which assists in separating water droplets **94**. The separation is accomplished while minimizing the difference between the air inlet pressure and air outlet pressure. The imparted accelerations assist in moving the water droplets **94** to the surface of the hydrophilic membrane **58**, in particular, to the film **88** and into the peaked portion **96**. The turbulence in the air channels **60** also enhances heat transport from the air in the air channels to the cooled walls of the coolant cavities **62**. A further benefit of the system **10**, in particular, the ozone generator **14**, may be further described with reference to FIG. **8**, which is a cross-sectional view of the planar air or water separator **12**.

FIG. **8** is similar to FIG. **7**, with the exception that the directional arrows **90** and **92** are removed, as well as the water droplets **94** not being present, but rather a directional arrow **98**, is shown in FIG. **8**, in contact with a layer of ozone **100** which, in turn, is in contact with the film **88**. An ozone generator, such as an electrochemical ozone generator **14**, to be further described with reference to FIG. **9**, generates an ozone layer **100**, which prevents biological growth on the hydrophilic membrane **58**, while also disinfecting the condensate, as well as disinfecting and purifying the air stream flowing with the plurality of air channels **60**. The electrochemical ozone generator **14**, may be further described with reference to FIG. **9**, which is cross-sectional view of the ozone generator **14** of FIG. **1**.

Under normal operating conditions, the air/water separator **12**, more particularly, air stream flowing in air channels **60** will likely contain microscopic particle matter, as well as biological contamination that would otherwise foul the air/water separator **12**. The electrochemical ozone generator **14** of FIG. **9**, provides the anti-fouling correction. The electrochemical ozone generator **14** performs an electrolytic process in which electrical energy is applied to cause a chemical change, similar in a manner as described in U.S. Pat. No. 4,416,747 ('747), which is herein incorporated by reference in its entirety.

FIG. **9** illustrates a electrochemical ozone generator **14** comprised of a cathode **104**, an anode **106**, and an ion exchange membrane **108** interposed between and separating the cathode **104** and the anode **106**. The cathode and the anode **104** and **106** respectively, are connected to an electrical

source **110**. More particularly, the cathode **104** is connected to the negative potential **112** of the electrical source **110**, whereas the anode **106** is connected to the positive potential **114** of the electrical source **110**.

The cathode **104**, anode **106**, and ion exchange membrane **108** are dimensioned, so as to fit into at least one of the air channels **60** (not shown) and cover a portion of the plastic hydrophilic membrane **58**. The anode **106** and cathode **104** are preferably made of stainless steel, and the ion exchange membrane **108** is preferably made of a plastic polymer based on perfluorinated sulphonic acids. The ion exchange membrane **108** may be coated on the cathode side with a layer of a mixture of 85% by weight carbon powder and 15% by weight platinum powder. The anode side of the ion exchange membrane **108** may be coated with PbO2 powder. A ion generator **14** causes ozone to be produced in the solution on the anode side of the ion exchange membrane **108**, while water is formed on the cathode side thereof. The H+, which is produced on the anode side by the decomposition of water to form oxygen and ozone (0_2, 0_3) **120**, shown in FIG. **9**, migrates through the ion exchange membrane **108** and reacts with oxygen in the water on the cathode side to form water.

The electrochemical ozone generator **14** generates anode and cathode reactions given below:

Anode Reaction(s)

$$3H_2O \rightarrow O_3(g)+6e^-+6H^+$$

$$O2+H_2O \rightarrow O_3(aq)+2e^-+2H^+$$

$$2H_2O \rightarrow O_2+4e^-+4H^+$$

Cathode Reaction

$$O_2+4e^-+4H^+ \rightarrow 2H_2O$$

In operation, the hydrophilic membrane **58** providing a condensing separating surface together with an in-situ electrochemical generation of ozone **14** at the condenser surface, which provides for disinfection of the air stream traveling in air channels **60**. In the operation of system **10**, the hydrophilic membrane **58** is cooled below the ambient dewpoint by a coolant flowing in the coolant cavities **62** and made available from a coolant source.

The moisture laden ambient air impacting the surface of hydrophilic membrane **58**, in particular film **88**, condenses water on the surface of the hydrophilic membrane **58**. This water is soaked up through the hydrophilic membrane **58** and transported through the hydrophilic membrane **58**, as well as through the screen **56**, and into the water line **38** leaving the air/water separator **12**.

During the above process, the electrochemical ozone generator **14** located on the air side of the hydrophilic membrane **58** creates a local concentration of ozone layer **100** in the condensed water, thereby disinfecting it. Excess ozone not absorbed by the water is exhausted into the air stream where it would contribute to the disinfection and purification of the air stream flowing in the air channels **60**.

It should now be appreciated that the practice of the present invention, in one embodiment, provides a system **10** for treatment and revitalization of air for astronauts operating in a zero gravity environment. The system **10** may also provide a revitalization of air that is used in home and office building air conditioning systems, airplane air systems, automotive air systems, room humidifiers, and room air cleaners.

The invention has been described with reference to preferred embodiments and alternates thereof. It is believed that many modifications and alterations to the embodiment as described herein will readily suggest themselves to those skilled in the art upon reading and understanding the detailed description of the invention. It is intended to include all modifications and alterations insofar as they come within the scope of the invention.

What I claim is:

1. A system for treating air, vapor, and water, said system comprising:

a treatment chamber;

a condenser located within the treatment chamber;

an air inlet for introducing air and vapor into the condenser;

an ozone generator for introducing ozone into the condenser to simultaneously ozonate the air, air vapor, and condensed water within the condenser;

an air outlet for removing ozonated air immediately ready for human consumption from the condenser;

a water outlet for removing ozonated water immediately ready for human consumption from the treatment chamber; and

a hydrophilic membrane separating the air inlet and air outlet of the condenser from the water outlet.

2. The system according to claim **1**, wherein the ozone generator is located at least partially within the condenser.

3. The system according to claim **2**, wherein said ozone generator is of an electrochemical type consisting of a cathode, anode, and an ion exchange membrane spaced between and separating said cathode and said anode, said cathode and said anode capable of being respectively connected to a negative (−) and positive (+) potentials of a voltage source.

4. The system according to claim **3**, wherein said cathode develops a reaction expressed as

$O_2+4e^-+4H^+ \rightarrow 2H_2O$, and wherein said anode develops reactions expressed as:

$$3H_2O \rightarrow O_3(g)+6e^-+6H^+$$

$$O_2+H_2O \rightarrow O_3(aq)+2e^-+2H^+$$

$$2H_2O \rightarrow O_2+4e^-+4H^+.$$

5. The system according to claim **4**, wherein the ozone generator is located on the hydrophilic membrane in communication with the air inlet and air outlet of the condenser.

6. The system according to claim **5**, wherein the ozonated air withdrawn from the air outlet also includes ozonated vapor.

7. The system according to claim **6**, wherein said hydrophilic membrane is of a plastic material having a medium grade of about 0.8μ, a thickness of about 0.0052 inches and a bubble point characteristic given in psid, of about 15.

8. A system for treating air, vapor, and water, said system comprising:

a treatment chamber;

a condenser located within the treatment chamber comprising a plurality of adjacent and interconnected air channels formed in a material of substantially high thermal conductivity and substantially low density, said plurality of air channels arranged over a hydrophilic membrane;

an air inlet for introducing air and vapor into the condenser;

an ozone generator for introducing ozone into the condenser channels to simultaneously ozonate the air, air vapor, and condensed water within the condenser;

an air outlet for withdrawing treated air from the condenser; and

a water outlet for withdrawing treated water ready for human consumption from the treatment chamber.

9. The system according to claim **8**, wherein said material having said substantially high thermal conductivity and sub-

stantially low density is selected from the group consisting of aluminum, magnesium, titanium, metal filled or carbon filled plastics, and high thermal conductivity carbon composites.

10. The system according to claim **9**, wherein said air channels are dimensioned to create radial accelerations of the flow therein.

11. The system according to claim **10**, wherein said water outlet includes a suction apparatus comprising spring loaded bellows to assisting in the removal of treated water.

12. The system according to claim **11**, further comprising a hydrophilic membrane separating the air inlet and air outlet from the water outlet.

13. The system according to claim **12**, wherein the ozone generator is located at least partially within said condenser.

14. The system according to claim **13**, wherein said ozone generator is of an electrochemical type consisting of a cathode, anode, and an ion exchange membrane spaced between and separating said cathode and said anode, said cathode and said anode capable of being respectively connected to a negative (−) and positive (+) potentials of a voltage source.

15. The system according to claim **14**, wherein said cathode develops a reaction expressed as

$O_2+4e^-+4H^+\rightarrow 2H_2O$, and wherein said anode develops reactions expressed as:

$$3H_2O\rightarrow O_3(g)+6e^-+6H^+$$

$$O_2+H_2O\rightarrow O_3(aq)+2e^-+2H^+$$

$$2H_2O\rightarrow O_2+4e+4H^+.$$

16. The system according to claim **15**, wherein the ozone generator is located on the hydrophilic membrane in communication with the air inlet and air outlet.

17. The system according to claim **16**, wherein the treated air withdrawn from the air outlet also includes treated vapor.

18. The system according to claim **17**, wherein said hydrophilic membrane is of a plastic material having a medium grade of about 0.8μ, a thickness of about 0.0052 inches and a bubble point characteristic given in psid, of about 15.

* * * * *