US008668613B1

(12) **United States Patent**
Stevens et al.

(10) **Patent No.: US 8,668,613 B1**
(45) **Date of Patent: Mar. 11, 2014**

(54) **OFFSET COMPOUND GEAR INLINE TWO-SPEED DRIVE**

(75) Inventors: **Mark A Stevens**, Broadview Heights, OH (US); **Robert F Handschuh**, North Olmsted, OH (US); **David G Lewicki**, Avon, OH (US)

(73) Assignee: **The United States of America as Represented by the Administrator of National Aeronautics and Space Administration**, Washington, DC (US)

(*) Notice: Subject to any disclaimer, the term of this patent is extended or adjusted under 35 U.S.C. 154(b) by 0 days.

(21) Appl. No.: **13/346,959**

(22) Filed: **Jan. 10, 2012**

(51) **Int. Cl.**
F16H 1/32 (2006.01)

(52) **U.S. Cl.**
USPC **475/162**; 74/332

(58) **Field of Classification Search**
USPC 74/332; 475/162
See application file for complete search history.

(56) **References Cited**

U.S. PATENT DOCUMENTS

1,843,071	A *	1/1932	Sterling	.....	74/332
1,854,082	A *	4/1932	Valletta	.....	74/332
1,976,887	A *	10/1934	Morgan	.....	74/332
2,197,575	A *	4/1940	Wert	.....	74/332
2,667,089	A *	1/1954	Gregory	.....	475/172
3,053,326	A	9/1962	Derschmidt		
5,178,028	A	1/1993	Bossler, Jr.		
6,612,195	B2	9/2003	Gmirya et al.		
6,641,365	B2	11/2003	Karem		
7,044,877	B2	5/2006	Ai		
8,091,445	B1 *	1/2012	Stevens et al.	.....	74/332
2007/0205321	A1	9/2007	Waide		

* cited by examiner

Primary Examiner — Derek D Knight
(74) *Attorney, Agent, or Firm* — Robert H. Earp, III

(57) **ABSTRACT**

A two-speed transmission having an input shaft and an output shaft, the transmission being capable of transitioning between fixed ratios, the high-range ratio being direct 1:1 and the low-range ratio being about 2:1. The transmission is a simple lightweight, yet robust, configuration utilizing only two gear meshes, being comprised of an input gear, a cluster gear, and an output gear. The transmission is controlled with a clutch and a sprag and with the input and output shafts turning in the same direction.

13 Claims, 7 Drawing Sheets

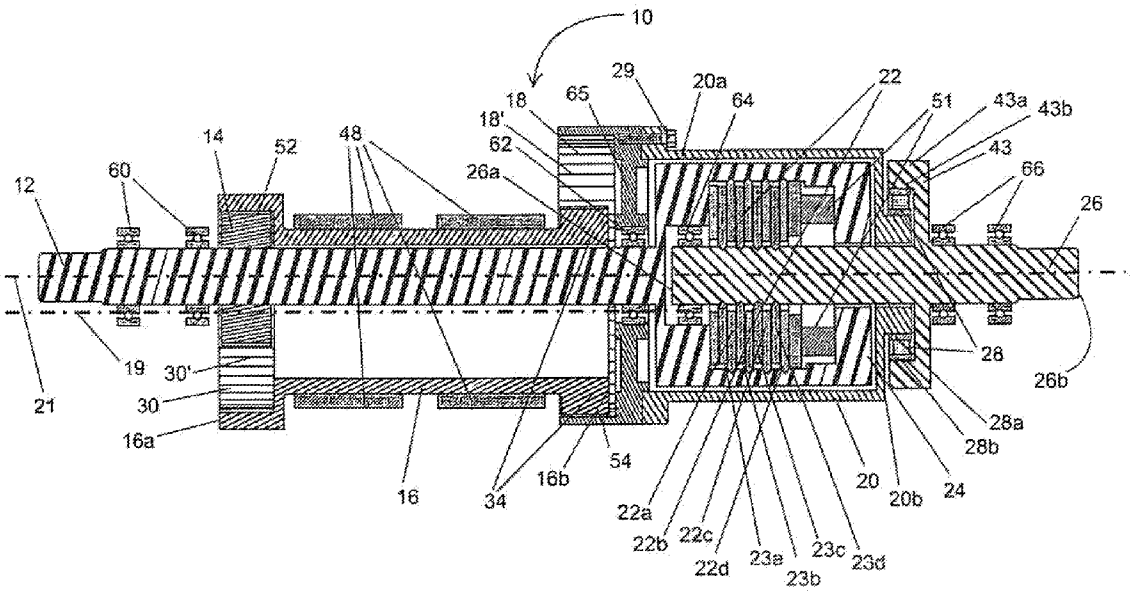

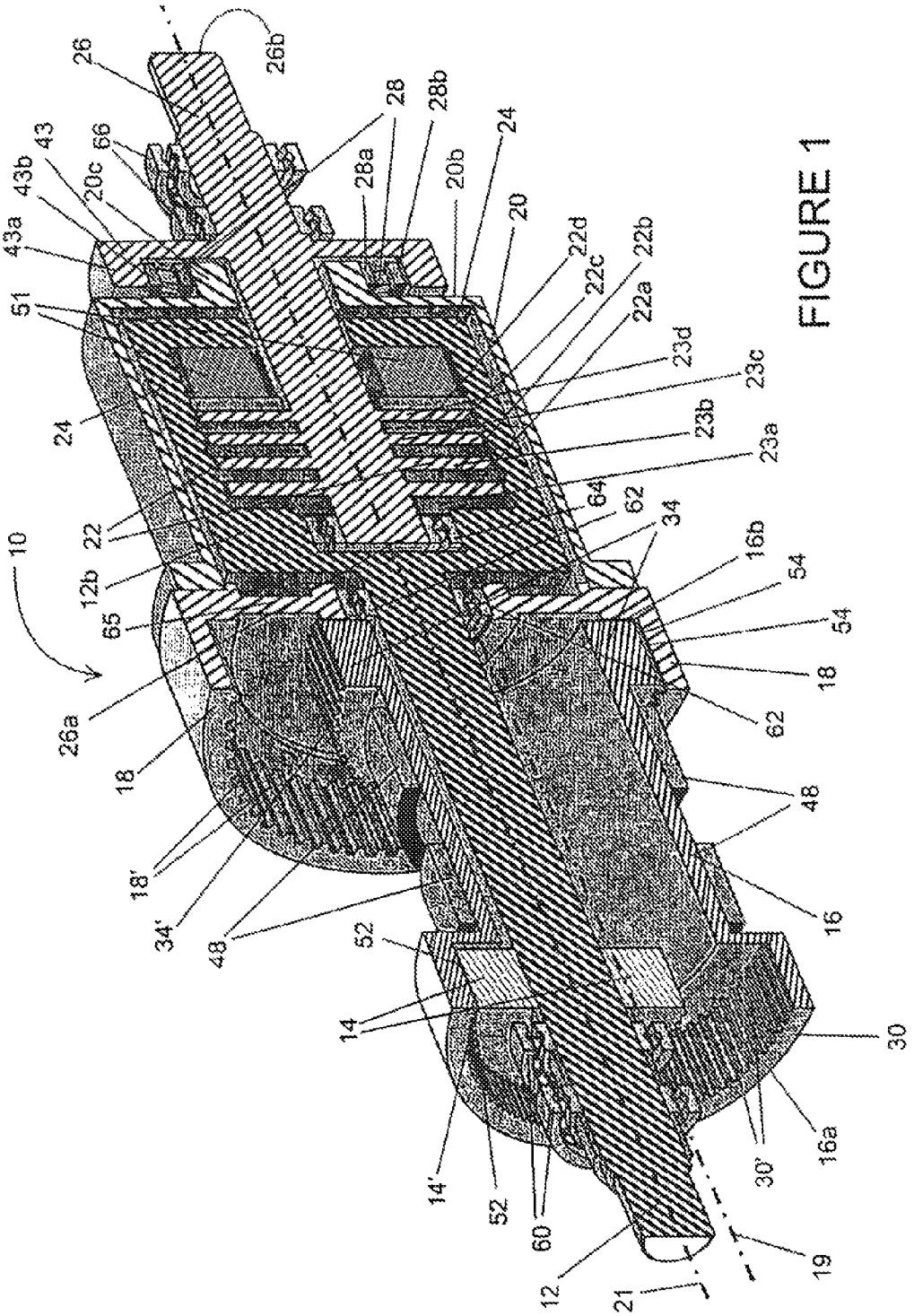
10
12
12b
14
14'
16
16a
16b
18
18'
19
20
20b
20c
21
22
22a
22b
22c
22d
23a
23b
23c
23d
24
26
26a
26b
28
28a
28b
30
30'
34
34'
43
43a
43b
48
51
52
54
60
62
64
65
66

FIGURE 1

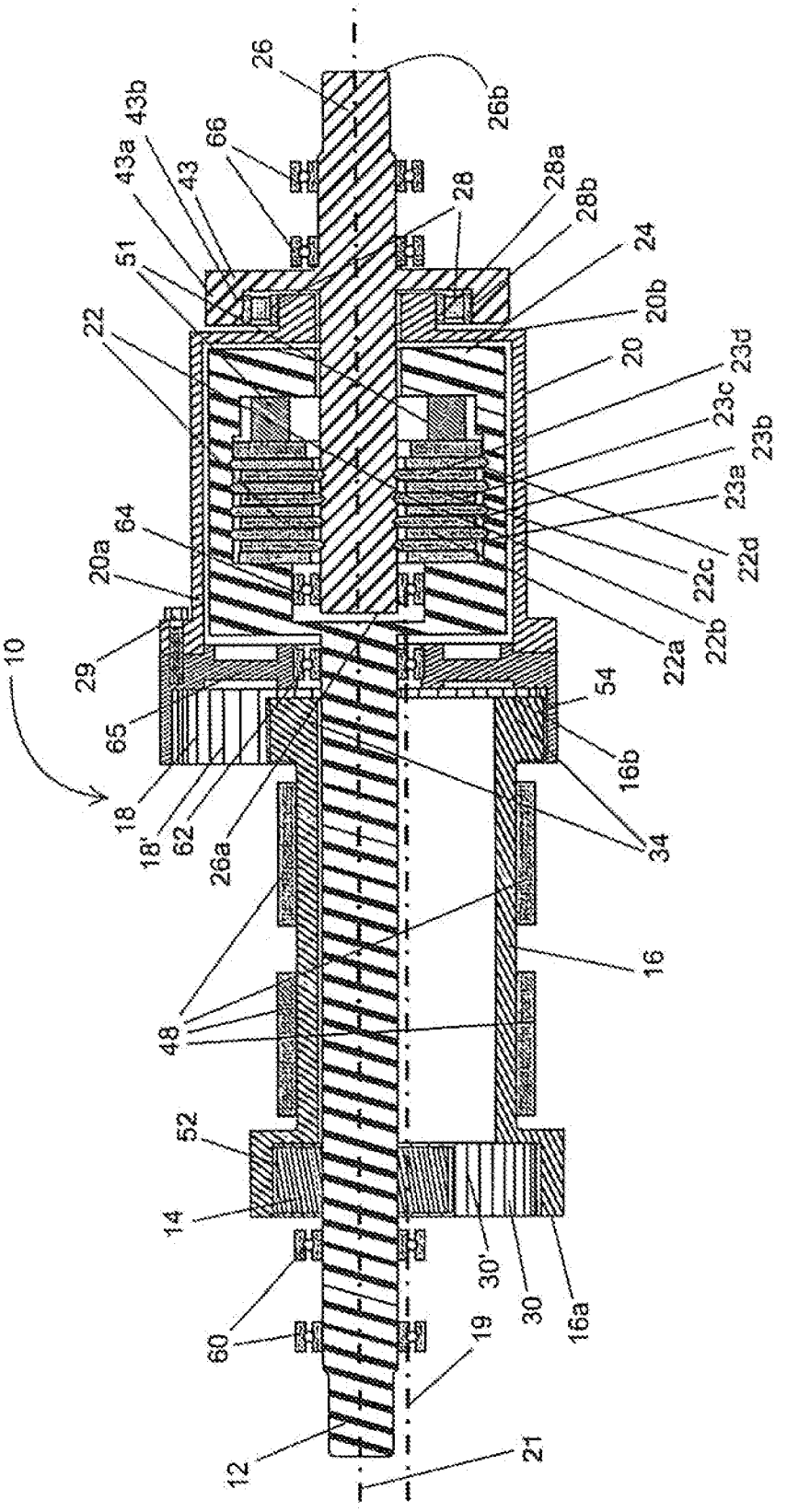
10
12
14
16
16a
16b
18
18'
19
20
20a
20b
21
22
22a
22b
22c
22d
23a
23b
23c
23d
24
26
26a
26b
28
28a
28b
29
30
30'
34
43
43a
43b
48
51
52
54
60
62
64
65
66

FIGURE 2A

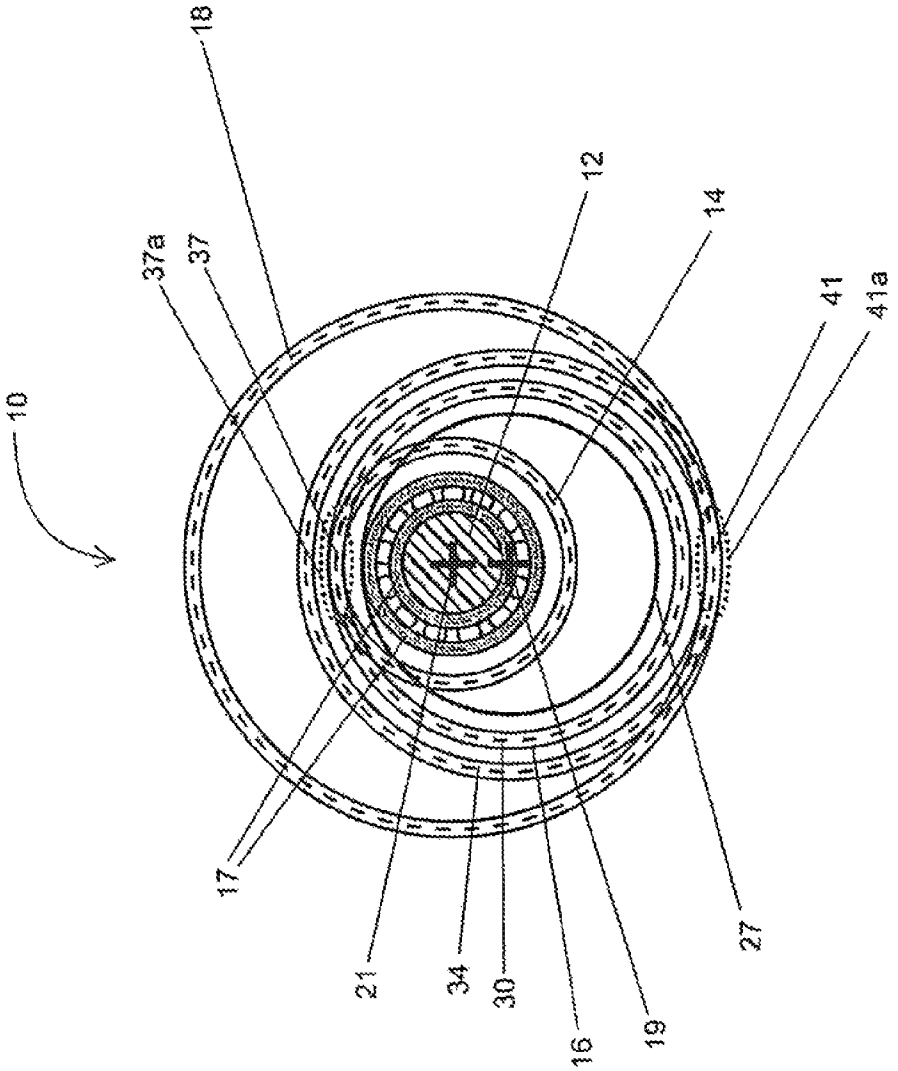

FIGURE 2B

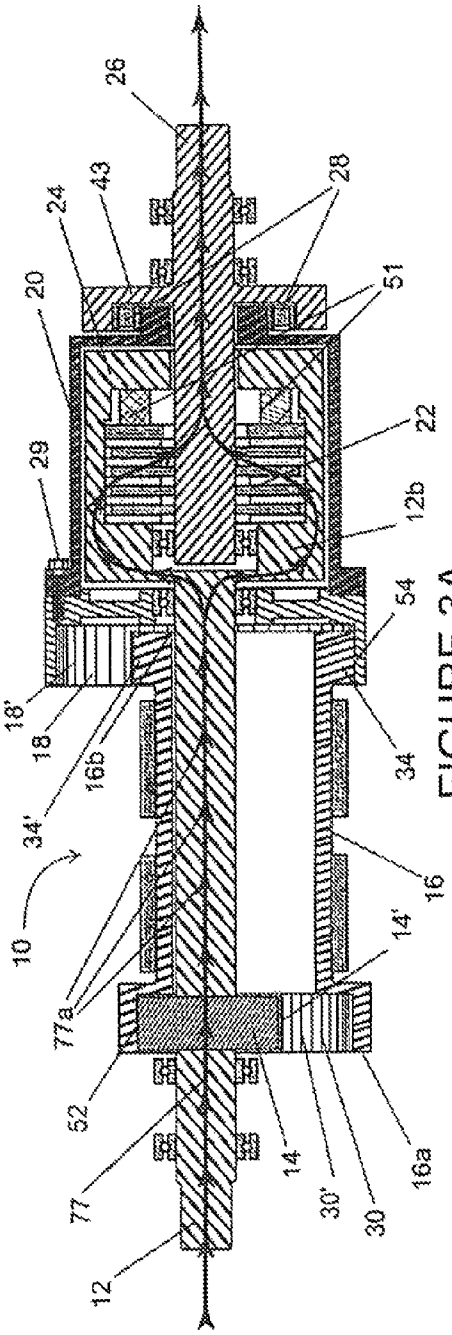

FIGURE 3A

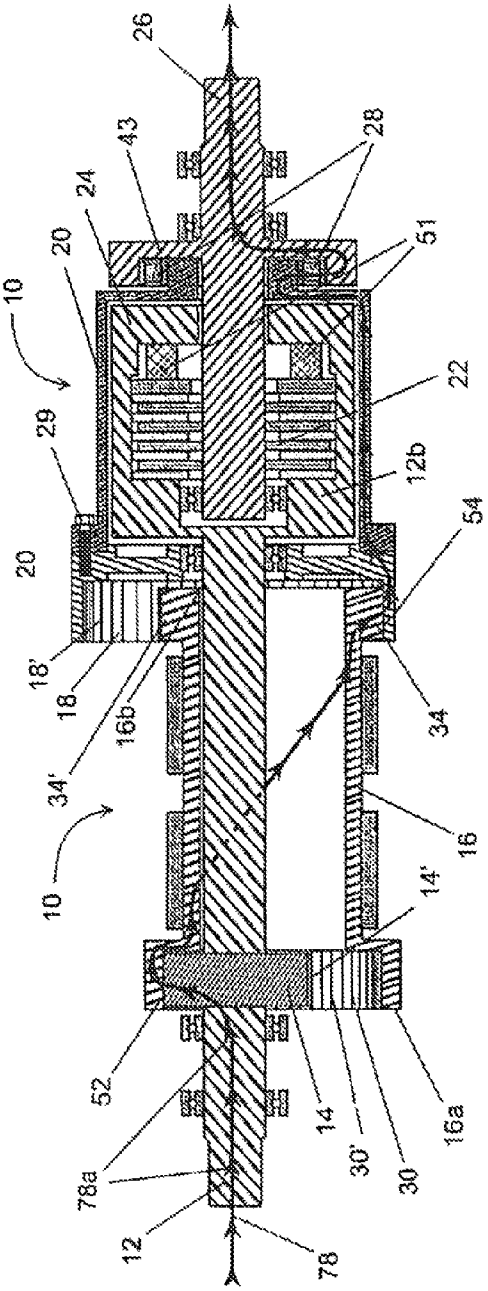

FIGURE 3B

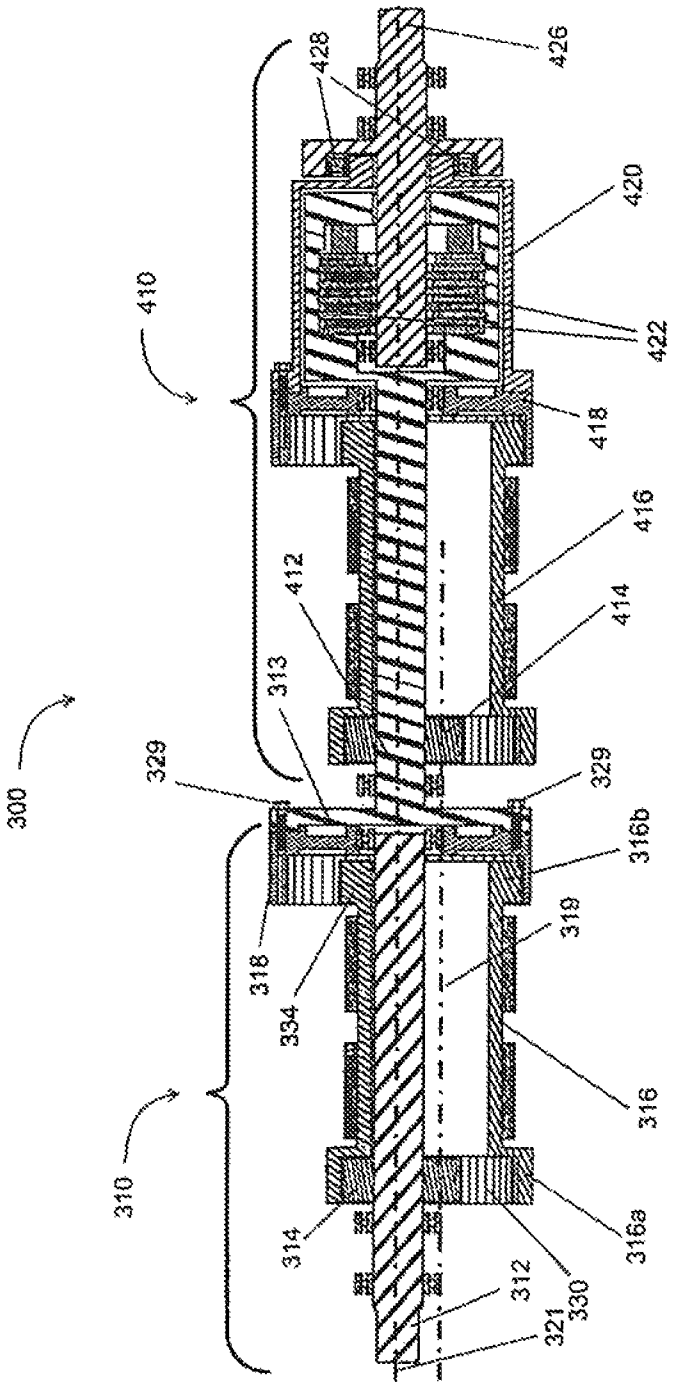
300
310
410
312
313
314
316
316a
316b
318
319
320
321
329
330
334
412
414
416
418
420
422
426
428

FIGURE 4

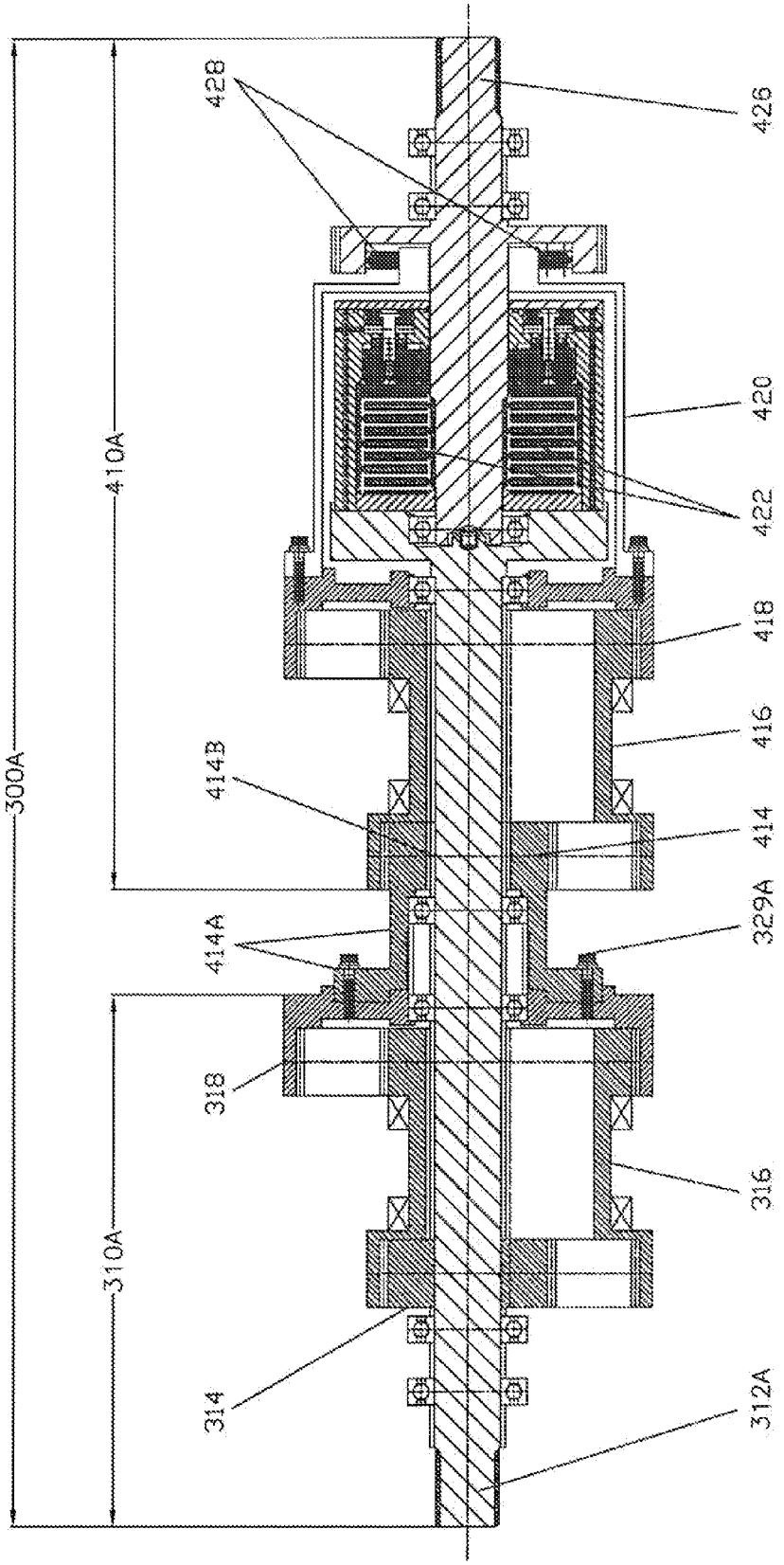
300A
410A
310A
428
426
420
422
418
416
414B
414
414A
329A
318
316
314
312A

FIGURE 5

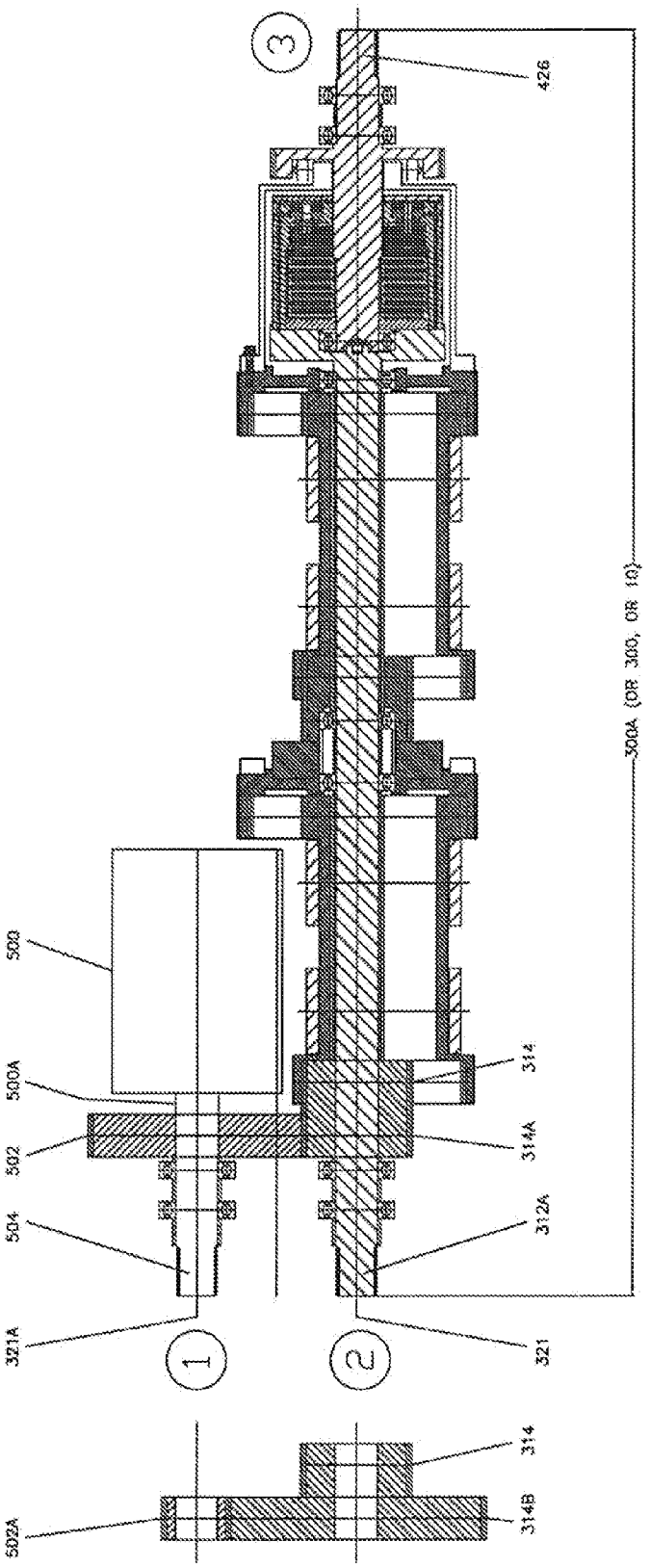
3
426
300A (OR 300, OR 10)
500
500A
502
504
321A
1
2
321
314
314A
312A
502A
314
314B

FIGURE 6

OFFSET COMPOUND GEAR INLINE TWO-SPEED DRIVE

ORIGIN OF INVENTION

The invention described herein was made by an employee of the United States Government and may be manufactured and used by or for the Government for Government purposes without the payment of any royalties thereon or therefore.

CROSS-REFERENCE TO RELATED APPLICATIONS

This application claims the benefit of U.S. Non-Provisional patent application Ser. No. 12/431,456 filed Apr. 28, 2009, entitled "Offset Compound Gear Inline Two-Speed Drive", which issued as U.S. Pat. No. 8,091,445 B1 on Jan. 10, 2012. The entirety of the above-noted application is incorporated by reference herein.

TECHNICAL FIELD

The invention relates to transmissions, and more particularly to a device(s) and configurations which provide a simple, lightweight two-speed drive which can be used either as an overall transmission or as a supplemental add-on input transmission (e.g., over-drive/under-drive) to extend the capability of an existing transmission.

BACKGROUND

In several recent studies and on-going developments for advanced rotorcraft, the need for variable or multi-speed capable rotors has been raised. A speed change of up to 50% has been proposed for future rotorcraft to improve overall vehicle performance. Accomplishing rotor speed changes during operation requires both a rotor that can perform effectively over the operational speed-load range, and a propulsion system that can enable these speed changes.

Rotorcraft propulsion is a critical element of the overall rotorcraft. Unlike fixed wing aircraft, the rotor propulsion system provides lift and control as well as forward thrust. As a result, the rotorcraft engine-gearbox system must be highly reliable and efficient. In addition, the gearbox system must be kept at minimum weight. Presently, the propulsion system accounts for up to 25% of empty vehicle weight. The drive system accounts for up to 72% of the total propulsion system weight. Future rotorcraft trends call for more versatile, efficient, and powerful aircraft, all of which challenge state-of-the-art propulsion system technologies. Variable speed rotors have been identified as having a large impact on many critical rotorcraft issues.

Currently, rotor speed can only be varied a small percentage by adjusting the speed of the engine. The variation in rotor speed is generally limited by engine efficiency and stall margin, permitting speed changes limited to approximately 15% when used in current tilt-rotor applications.

There is a need for a transmission with a high-range ratio (1:1) for hover mode operation and low-range reduction ratio, such as for example 50% (2:1), through a speed change mechanism, for cruise mode operation. A transmission of this type could be incorporated as an element within the overall propulsion system resulting in overall ratios of 50:1 to 100:1 in the aircraft.

It is commonly recognized that variable speed propulsion is required for the design of future advanced rotorcraft.

Reductions in rotor speed are required to limit the advancing rotor tip speed and reduce rotor noise.

RELATED PATENTS

The following patents are incorporated by reference in their entirety herein.

U.S. Pat. No. 7,044,877 to Ai discloses for example a two speed transmission having an input shaft and an output shaft. The two-speed transmission is capable of changing the rotating speed of the output shaft from a first speed ratio to a second speed ratio. The shift between the first rotating speed ratio and the second rotating speed ratio is smoothly accomplished by the combination of two sets of planetary gear clusters and two electric motors. The electric motors being are to smooth the mechanical shift between the first speed ratio and the second speed ratio. However, Ai does not disclose a transmission with a high-range ratio (1:1) and low-range reduction ratio, such as for example 50% (2:1), which changes from one to the other through a speed change mechanism including gears, a clutch and a sprag.

U.S. Pat. No. 6,641,365 to Karem disclosed for example "A variable speed helicopter tilt rotor system and method for operating such a system are provided which allow the helicopter rotor to be operated at an optimal angular velocity in revolutions per minute (RPM) minimizing the power required to turn the rotor thereby resulting in helicopter performance efficiency improvements, reduction in noise, and improvements in rotor, helicopter transmission and engine life."

US Patent Application No. 2007/0205321 to Waide discloses for example gearboxes providing first and second power-balanced paths in which a speed changer is configured to operate with only one path. Most preferably, the gearbox includes a friction clutch and a sprag clutch arranged such that, together with a lay-shaft and spur-gear differential, gear shifting can be done while transmitting power. The speed changing gearbox of the '321 application has first and second independently and concurrently operational drive paths for transmission of torque. However, Waide does not disclose a transmission with a high-range ratio (1:1) and low-range reduction ratio, such as for example 50% (2:1), which changes from one to the other and directs the torque through an output shaft which is in the same drive path as the input shaft.

SUMMARY OF THE INVENTION

With the present invention, a transmission, preferably for a rotorcraft is provided where the rotation of the rotor blades can be at 50% or less while maintaining engine speed at the optimal efficiency/performance speed. A portion of the overall 50% reduction can come from extending the engine speed operability range beyond present 15% decrease with the balance provided by the transmission of the present invention. At the present time, the reduction in rotor speed of about 15% is presently accomplished by changing the engine speed. However, with the transmission of the present invention, the entire 50% decrease in rotational speed can be realized without requiring any additional reduction in the speed of the engine. Future overall propulsion system (engine, driveline, and rotor) studies will determine what portion the transmission device should provide for overall optimal performance. This invention uniquely provides both a high-speed 1:1 range and a low-speed 2:1 range (50% speed reduction) with minimal robust parts. The low range ratio being dependent upon the gearing contained within can be varied, as required, to meet specific requirements.

According to the present invention, there is disclosed a transmission having a gear arrangement for transmitting torque from an input shaft to an output shaft. The input shaft

rotates about a first rotational axis and has a first gear coupled thereto. An elongated, hollow, cylindrical shaft rotates about a second rotational axis that is offset from the first rotational axis. The hollow cylindrical shaft has a second gear at one end there of which meshes with the first gear and a third ring gear at an opposite end thereof. A fourth gear is mounted to one end of a hollow drive shaft. The fourth gear and the hollow drive shaft rotate about the first rotational axis. The fourth gear is meshed with the third gear of the hollow, cylindrical shaft. The hollow drive shaft has a cylindrical end portion at an opposite end thereof. The output shaft rotates about the first rotational axis and has a flange portion attached thereto. A sprag clutch has an input side mounted to the cylindrical end portion of the hollow drive shaft and an output side mounted to the flange portion of the output shaft. A multi-plate clutch is attached to an end portion of input shaft and to the output shaft. Coupling structure is provided for coupling the input shaft with the output shaft whereby the transmission operates in first and second modes.

Further according to the present invention, the first mode of operation results in a rotating speed ratio R_1 of 1 to 1 between the input shaft and the output shaft and the second mode of operation results in the rotating speed reduction ratio range of $4.00>R_2>1.50$ between the input shaft and the output shaft. Preferably, the second mode of operation results in the rotating speed reduction ratio range of 2 to 1 between the input shaft and the output shaft.

Still further according to the present invention, coupling structure for coupling the input shaft with the output shaft can cause the rotational speed of the output shaft to be the same as the rotational speed of the input shaft is the multi-plate clutch.

Yet further according to the present invention, the clutch is a multi-plate clutch having first spaced clutch plates driven by an end portion of the input shaft and second spaced clutch plates which drive the output shaft and interspersed between the first spaced clutch plates.

Moreover, according to the present invention, a clutch actuator means engages or disengages the first and second interspersed clutch plates whereby if the multi-plate clutch is engaged the rotational speed of the output shaft is at a first speed which is the same as that of the input shaft and if the clutch is disengaged the rotational speed of the output shaft is at a speed that is different from that of the input shaft.

Also, according to the present invention, the multi-plate clutch causes the rotational speed of the output shaft to be the same as the rotational speed of the input shaft whereby the transmission operates in first mode (high speed range, 1:1 ratio).

Also, according to the present invention, the sprag clutch causes the rotational speed of the output shaft to be less than the rotational speed of the input shaft whereby the transmission operates in second mode (low speed range, 2:1 ratio).

According to the present invention, the first gear has external teeth adapted to mesh with the internal teeth of the second gear and third gear has external teeth adapted to mesh with the internal teeth of fourth gear.

Further according to the present invention, the relationship between the output rotational speed and the input rotational speed for the second mode of operation is given by the equation

$$\text{Output speed} = \text{Input speed} \times \left(\frac{N_{14}}{N_{30}}\right) \times \left(\frac{N_{34}}{N_{18}}\right)$$

where N_{14} is equal to the number of teeth on first gear, N_{30} is equal to the number of teeth on the second gear, N_{34} is equal to the number of teeth on the third gear, and N_{18} is equal to the number of teeth on the fourth gear.

Still further according to the present invention, the input shaft is driven by a device from which it receives rotational power such as an engine or an intermediate drive coupling if the present invention is added to an existing design engine-transmission driveline and used as a supplemental inline speed change device.

Yet further according to the present invention, the first input shaft of the transmission is connected to the output shaft of a second gear arrangement for transmitting torque from a second input shaft to the first input shaft. The second gear arrangement comprises a second input shaft rotating about the first rotational axis and having a first gear coupled thereto. An elongated, hollow, cylindrical shaft rotating about the second rotational axis is offset from the first rotational axis. The hollow cylindrical shaft having a second gear at one end thereof which engages the first gear and a third gear at an opposite end thereof. A fourth gear is supported by a bearing at the aft end of the input shaft of the transmission.

Still further according to the present invention, the relationship between the output speed and input for low speed operation of the second gear arrangement is given by the equation:

$$\text{Output Speed}=\text{Input Speed}\times(N_{414}/N_{430})\times(N_{434}/N_{418})$$

Where N_{14} is equal to the number of teeth on first gear (**414**),

N_{30} is equal to the number of teeth on the second gear (**430**),

N_{34} is equal to the number on the third gear (**434**),

and N_{18} is equal to the number of teeth on the fourth gear (**418**).

Yet further according to the present invention, the transmission is a rotorcraft transmission of a light weight configuration with reduced parts.

According to the present invention, there is disclosed a method of transmitting torque from an input shaft to an output shaft of a transmission. The method includes the steps of rotating the input shaft having a first gear coupled thereto about a first rotational axis; rotating an elongated, hollow, cylindrical shaft about a second rotational axis that is offset from the first rotational axis, the hollow cylindrical shaft having a second gear at one end thereof which engages the first gear and a third gear at an opposite end thereof; rotating a fourth gear mounted to one end of a hollow drive shaft with a cylindrical end portion at an opposite end thereof about the first rotational axis whereby the fourth gear engages the third gear of the hollow, cylindrical shaft; rotating the output shaft with a flange portion attached thereto about the first rotational axis; mounting an input side of a sprag clutch to the cylindrical end portion of the hollow drive shaft and an output side of the sprag clutch to the flange portion of the output shaft; and coupling the input shaft with the output shaft whereby the transmission (**10**) operates in first or second modes.

Further according to the present invention, there is disclosed the steps of operating in the first mode of operation resulting in a rotating speed ratio R_1 of 1 to 1 between the input shaft and the output shaft; and operating in the second mode of operation resulting in the rotating speed ratio R_2 of and the second mode of operation results in the rotating speed reduction ratio range of $4.00>R_2>1.50$ between the input shaft and the output shaft.

Still further according to the present invention, means are provided for attaching first spaced clutch plates of a multi-

plate clutch to an end portion of input shaft and attaching second spaced clutch plates to the output shaft whereby the second clutch plates are interspersed between the first spaced clutch plates; and engaging the first and second interspersed clutch plates whereby the rotational speed of the output shaft is the same as that of the input shaft or disengaging the first and second interspersed clutch plates whereby the rotational speed of the output shaft is less than that of the input shaft.

Also according to the present invention, there is disclosed a method of transferring torque from an input shaft to an output shaft of a transmission including the steps of operating in the first mode of operation resulting in a rotating speed ratio R_1 of 1 to 1 between the input shaft and the output shaft; and operating in the second mode of operation resulting in the rotating speed ratio R_2 of 2 to 1 between the input shaft and the output shaft.

Further according to the present invention, there is disclosed a method of transferring torque from an input shaft to an output shaft of a transmission including the step of engaging or disengaging the multi-plate clutch whereby when the multi-plate clutch is engaged the rotational speed of the output shaft is at a first speed which is the same as that of the input shaft and when the multi-plate clutch is disengaged the rotational speed of the output shaft is at a speed that is less than that of the input shaft.

Also according to the present invention, there is disclosed the steps of engaging or disengaging the clutch whereby when the clutch is engaged the rotational speed of the output shaft is at a first speed which is the same as that of the input shaft and when the clutch is disengaged the rotational speed of the output shaft is at a speed that is less than that of the input shaft.

Still further according to the present invention, there is disclosed the steps of coupling the input shaft with the output shaft to cause the transmission to operate in the first mode with the rotational speed of the output shaft the same as the rotational speed of the input shaft is with the multi-plate clutch.

Still further according to the present invention, there is disclosed the steps of coupling the input shaft with the output shaft to cause the transmission to operate in the second mode with the rotational speed of the output shaft less than the rotational speed of the input shaft is with the sprag clutch where the output speed is governed by the overall ratio of the gear set comprised of the first, second, third and fourth gears.

Yet further according to the present invention, there is disclosed the step of connecting the input shaft to a device that transmits rotational power.

Further according to the present invention, there is disclosed the step of serially connecting a plurality of gear arrangements and determining the overall output ratio of the two serially connected gear arrangements from the product of the two in-series ratios, R_1, R_2.

BRIEF DESCRIPTION OF THE DRAWINGS

Reference will be made in detail to embodiments of the disclosure, examples of which may be illustrated in the accompanying drawing figures (FIGURES). The figures are intended to be illustrative, not limiting. Although the invention is generally described in the context of these embodiments, it should be understood that it is not intended to limit the invention to these particular embodiments.

Certain elements in selected ones of the figures may be illustrated not-to-scale, for illustrative clarity. The cross-sectional views, if any, presented herein may be in the form of "slices", or "near-sighted" cross-sectional views, omitting certain background lines which would otherwise be visible in a true cross-sectional view, for illustrative clarity. In some cases, hidden lines may be drawn as dashed lines (this is conventional), but in other cases they may be drawn as solid lines.

If shading or cross-hatching is used, it is not intended to be of use in distinguishing one element from another (such as a cross-hatched element from a neighboring un-shaded element). It should be understood that it is not intended to limit the disclosure due to shading or cross-hatching in the drawing figures.

FIG. **1** is an oblique cross sectional view of a two-speed, mechanical-power-conveying transmission, according to the present invention.

FIG. **2**A is an orthogonal cross sectional view of the two-speed, mechanical-power-conveying transmission, according to the present invention.

FIG. **2**B is a schematic axial view of the gear relationships in the two-speed, mechanical-power-conveying transmission, in according to the present invention.

FIG. **3**A is an orthogonal cross sectional view of the present invention showing the path of power flow during high-speed output operation of the two-speed, mechanical-power-conveying transmission, according to the present invention.

FIG. **3**B is an orthogonal cross sectional view of the present invention showing the path of power flow during low-speed output operation of the two-speed, mechanical-power-conveying transmission, according to the present invention.

FIG. **4** is an orthogonal cross sectional view of multiple stages of the two-speed, mechanical-power-conveying transmission in series, according to the present invention. This configuration consists of a fixed-ratio first stage and a variable-ratio second stage with only the second stage clutch controlled.

FIG. **5** is an orthogonal cross sectional view of multiple stages of an alternate two-speed, mechanical-power-conveying transmission in series, according to the present invention. This configuration consists of two variable-ratio stages both simultaneously clutch controlled.

FIG. **6** is an orthogonal cross sectional view of the above (FIG. **5**) in a configuration in which the power input is transferred directly into the input gear in lieu of the input shaft end providing for up to three outputs at different speeds, both of fixed ratio and variable ratio relative to the motor input speed.

DETAILED DESCRIPTION OF THE INVENTION

Throughout the descriptions set forth herein, various features of the invention may be described in the context of a single embodiment. The features, however, may also be provided separately or in any suitable combination. Conversely, although the invention may be described herein in the context of separate embodiments for clarity, the invention may also be implemented in a single embodiment. Furthermore, it should be understood that the invention can be carried out or practiced in various ways, and that the invention can be implemented in embodiments other than the exemplary ones described hereinbelow. The descriptions, examples, methods and materials presented in the description, as well as the claims, should not be construed as limiting, but rather as illustrative.

If any dimensions are set forth herein, they should be construed in the context of providing some scale to the relationship between the elements. For example, a given element may have an equal, lesser or greater dimension (such as diameter) than another element. Any dimensions that are important or critical will generally be identified as such. The term "at least" includes equal to or greater than. The term "up

to" includes less than. Also, an open-ended range or ratio as "at least 2:1" should be interpreted to include sub-ranges such as at least 2:1, at least 5:1, and at least 10:1.

The present two-speed transmission invention **10** is referred to herein as a "transmission," "two-speed transmission," "compound gear transmission," or variations thereof, or as the inventors' preferred usage: "offset compound gear drive," or OCG.

Referring to FIG. **1** there is shown in cross sectional view the novel two-speed, mechanical-power-conveying transmission **10** comprising an input shaft **12** having a first gear **14** attached thereto, an output shaft **26**, an elongated, hollow, cylindrical shaft **16** having a second gear **30** possessing internal teeth at one end **16***a* of the cylindrical shaft, and a third gear **34** possessing external teeth at the other end **16***b* of the cylindrical hollow shaft, a fourth gear **18** integral with or attached to wheel **65** and supported on bearing **62** maintaining concentricity with gear **14** by means of the aft end of shaft **12**, a multi-plate clutch **22**, and a sprag clutch **28**. The input shaft (**12**) is rotationally driven by a device (**13**), such as an engine, from which it receives rotational power. The elongated cylindrical shaft **16** has a rotational axis **19** that is offset from a shared main rotational axis **21** of the input shaft **12** and the output shaft **26**. Input shaft **12** is supported on bearings **60** and **62**. Output shaft **26** is supported on bearings **64** and **66**. Bearings **60** and **66** serve as drive system main bearings. Bearings **62** and **64** serve as intermediate bearings. Bearing **62** maintains concentricity and permits relative differential rotational speeds between gear **18** and shaft **12**. Bearing **64** serves as a pilot bearing between input shaft **12** and output shaft **26** to maintain concentricity and permit relative differential rotational motion between input shaft **12** and output shaft **26** (i.e., differential rotational speeds). Bearings **60**, **62**, **64**, and **66** share a common central axis **21**. Shaft **16** is supported on bearings **48** which are concentric with the axis **19** and are offset from the central axis **21** of bearings **60**, **62**, **64**, and **66**. The offset between the axis **19** and **21** is a direct function of the gear ratios. Bearings **60**, **62**, **64**, and **66** are represented as rolling element type bearings but may also be of the fluid film type or magnetic type as warranted by overall transmission speed and power requirements, and bearings **48** which are represented as fluid film type journals may also be of the rolling element type.

The first gear **14** having external teeth, is affixed to the input shaft **12**, and meshes with the second gear **30** having internal teeth, on the forward end **16***a* of the elongated hollow shaft **16**. At the aft end **16***b* of the elongated hollow shaft **16** is a third gear **34**, having external teeth, and which meshes with a fourth gear **18**, having internal teeth. The fourth gear **18** is attached to a hollow drive shaft **20** at a forward end **20***a*, by means such as bolts **29** (see FIG. **2**A). The opposite or distal end **20***b* of hollow drive shaft **20** has a cylindrical end portion **20***c* onto which is mounted the input side **28***a* of a sprag clutch **28**.

The output shaft **26** has an integral flange portion **43** that is located between opposite ends **26***a* and **26***b* of the output shaft **26**. Flange portion **43** has an upstanding rim **43***a* with an inner surface **43***b* that receives the output side **28***b* of the sprag clutch **28**. The input shaft **12** has an end portion **12***b* that is large in diameter as compared to the remainder of the input shaft **12**.

A hollow cylinder **24**, sized to accommodate the multi-plate clutch assembly **22**, is attached or contiguous with the input shaft distal end portion **12***b* of input shaft **12**. The clutch assembly **22** has alternating stacked clutch plates **22***a*, **22***b*, **22***c*, **22***d* (**22***a*-**22***d*) (see FIG. **2**) that are driven by, and rotate at the same speed as hollow cylinder **24** by means of a spline or tooth engagement at the outer perimeter. The spaced stacked plates **22***a*-**22***d* engage by means of friction a set of interspersed stacked clutch plates **23***a*, **23***b*, **23***c*, **23***d* (**23***a*-**23***d*) which drive and rotate at the same speed as the output shaft **26** by means of spline or tooth engagement at the inner perimeter. An annularly arranged clutch actuator **51**, which is mounted to and rotates with the end portion **12***b* of input shaft **12**, compresses or releases the clutch **22** to cause it to engage or disengage during operation, as described herein below. The configuration of the clutch actuator **51** is a mechanical spring arrangement (e.g., helical coil, Belleville, diaphragm spring) activated and hydraulically released (e.g., by an annular piston). A mechanical fail safe feature is incorporated in the clutch release (disengagement) mechanism so that the clutch will be engaged if there is a failure of the clutch release mechanism. FIG. **2**B provides an axial schematic view of the rotating components of the present transmission invention **10**. The elements shown are the input shaft **12** (which has the output shaft **26** behind it and out of view), having the first gear **14** attached thereto, a ball or roller type bearing **17**, the second gear **30** and the third gear **34** that are part of, and integral with, the offset hollow cylindrical shaft **16**, and the fourth gear **18**. The solid line **27** defines the foreshortened, end view of the cylindrical surface plane of bearings **48**, which provide support to offset hollow shaft **16**. The offset aspect of the hollow driveshaft **16** is evident in the location of its axis of rotation **19** in relation to the axis of rotation **21** that is shared by the input shaft **12** and the output shaft **26**. Axis of rotation **21** is the central, or primary, machine axis on which the drive system input and output are centered, whereas axis of rotation **19** is a secondary axis of rotation on which some of the internal components between the input and output rotate, primarily hollow shaft **16**, second gear **30**, and third gear **34**. The dashed oval **37***a* encompasses a first mesh plane **37** where the first gear **14** meshes with the second gear **30**, and the second dotted oval **41***a* encompasses the second mesh plane **41** where the third gear **34** meshes with the fourth gear **18**. FIG. **2**B in an idealized view combining mesh plane **37** and mesh plane **41** into a single plane for presentation of the OCG Offset Compound Gear concept basis, whereas in the present invention the two mesh planes are separated axially.

A first bearing set **60** (see FIGS. **1** AND **2**A) supports the input end **12***a* of the input shaft **12**. A first single bearing **62** supports the fourth gear **18** in relation to the input shaft **12**. A second single bearing **64** supports the output shaft **26** in relation to the input shaft **12**. A second bearing set **66** supports the output shaft **26**. The hollow, cylindrical offset shaft **16** is carried by bearings **48**, which are of the fluid film journal/thrust type or rolling element bearing type based upon specific transmission requirements.

Operational Dynamics

During operation, if the multi-plate clutch **22** is engaged, then the rotational speed of the output shaft **26** is the same as that of the input shaft **12** and the power flows directly from the input shaft **12** to the output shaft **26** through the multi-plate clutch **22** by means of torque transmitted via friction created by the clamping force provided by releasing clutch actuator **51**. If the clutch **22** is disengaged, then the rotational speed of the output shaft **26** is less than that of the input shaft **12** and the power flows from the fourth gear **18** to the flange portion **43** of the output shaft **26** by way of the sprag clutch **28**. The ratio of the input rotational speed and the output rotational speed when the clutch **22** is disengaged is on the order of 2:1 as described or some other ratio as required.

The input/output speed ratio is a function of the effective respective diameters of the first and second meshing gears **14** and **30**, respectively, and the respective diameters of the third

and fourth meshing gears **34** and **18**, respectively, as should be readily evident to those who are skilled in the art of transmission of rotary mechanical power. The input/output ratio is discussed in more detail hereinbelow.

The two-speed operation of the present transmission invention **10** becomes more evident upon contemplation of cross sectional views of FIGS. **3**A and **3**B. FIG. **3**A illustrates high-speed operation of the present transmission invention **10**, which takes place when the multi-plate clutch assembly **22** is engaged. The direction of flow of rotary mechanical power is shown by means of the line **77** with arrowheads **77***a*. The direction of flow of mechanical rotary power is from input shaft **12**, hollow cylinder **24**, to clutch assembly **22** and through output shaft **26**, such that the output speed is the same as the input speed (the output ratio is 1:1.)

FIG. **3**B illustrates low-speed operation of the present transmission invention **10**, which takes place when the multi-plate clutch assembly **22** is disengaged. Power enters at the input shaft **12** and is transferred by way of the first gear **14** to the second gear **30**, which is contiguous with the hollow driveshaft **16**. The hollow driveshaft **16** conveys rotary power to the contiguous third gear **34**, which transmits it to the fourth gear **18**, which conveys it onward to the hollow drive shaft **20** that is affixed, such as by means of bolts **29**, to a wheel portion **65** of the fourth gear **18**. The hollow driveshaft **20** conveys power to the sprag clutch **28**, which transmits it onward to the flange portion **43** of the output shaft **26**, such that the output speed is less than the input speed, such as for example the output ratio is 2:1.

Input/Output Speed Ratios

The cylindrical offset shaft **16** comprises second and third gears **30** and **34**, respectively, disposed respectively at opposing ends **16***a* and **16***b* of the offset hollow shaft assembly. The second gear **30** has internal gear teeth **30'** and the third gear **34** has external gear teeth **34'**. The second gear **30** of the cylindrical offset shaft **16** receives mechanical rotary power from the first gear **14** at the first gear mesh **52** (FIG. **2**A) and then conveys the rotary mechanical power by means of the third gear **34** that meshes with the fourth gear **18** at the second gear mesh **54**.

The internal gear teeth **30'** of second gear **30** of the cylindrical offset shaft **16** receive rotary force from the external gear teeth **14'** of the first gear **14**; the external teeth **34'** of the third gear **34** conveys rotary force to the internal gear teeth **18'** of the fourth gear **18** which conveys rotary mechanical power to the hollow driveshaft **20**. Input/output speed ratios are determined by the respective numbers of gear teeth **30'**, **34'**, **14'**, **18'** of the two meshing gear sets, first and second gears **14**, **30**, respectively and third and fourth gears **34**, **18**, respectively.

The respective gear teeth **30'**, **34'**, **14'**, **18'** of first and second gears **14**, **30**, respectively and third and fourth gears **34**, **18**, respectively, can be of the straight cut spur varieties or of the helically cut or other gear teeth types such as herringbone as deemed necessary for required power rating operational reliability and quiet operation.

Note that all rotating parts described hereinabove rotate in the same direction. Reductions in rotary speed take place at two locations: (1) at the first gear mesh **52** between the first gear **14** and the second gear **30** of the cylindrical offset, double-gear assembly **16** and, (2) at the second gear mesh **54** between the third gear **34** of the second gear **18**.

The relationship between the output speed and input for the low speed operation is given by

$$\text{Output speed} = \text{Input speed} \times \left(\frac{N_{14}}{N_{30}}\right) \times \left(\frac{N_{34}}{N_{18}}\right)$$

where N_{14} is equal to the number of teeth on first gear **14**, N_{30} is equal to the number of teeth on second gear **30**, N_{34} is equal to the number of teeth on third gear **34**, and N_{18} is equal to the number of teeth on fourth gear **18**.

The remainder of this section is a discussion on the ratio range potential of the OCG. The term "R" means the same as "ratio."

The ratio-range potential for the speed reduction between the input and the output shafts **12** and **26** of the OCG transmission **10** in a single-stage configuration is 4.00>R>1.50 (speed reduction output) and, conversely, it is 0.25<R<0.75 for a back driven, or reverse (speed increasing output) configuration. Preferably, however, the speed reduction ratio from the input to the output is 2:1 or R=2.0.

OCGS in Series: Arrangement One (Multi-Stage Fixed/Variable Ratio)

Referring now to FIG. **4**, there is shown, in cross-sectional schematic view, two OCGs **310**, **410** coupled in such a way that the output of a first OCG **310** is directed into a second OCG **410** so as to provide a series arrangement **300** wherein the overall ratio of input/output speed reduction (or multiplication) can be greater than that of a single OCG. It is possible, as those skilled in the art would clearly appreciate, that an unlimited number of OCGs could be so serially arranged, though practical considerations would necessarily place limits.

The series arrangement **300**, portrayed in FIG. **4**, includes the first OCG **310** which is comprised of the gear portion only of the transmission **10** described hereinabove. The first OCG **310** has an input shaft **312** and three moving parts with gears such that the input shaft drives a fifth gear **314**, a hollow driveshaft **316**, and an eight gear **318**, which correspond respectively to the first gear **14**, the hollow driveshaft **16** and the fourth gear **18** in the above described OCG transmission **10**. The operational dynamics of the OCG gear train **310** need not be described again, as it is the same as that given hereinabove in relation to the basic OCG transmission **10**.

First OCG **310**, as shown in FIG. **4**, has an output shaft formed of a flange **313** which is secured to the eighth gear **318** by means such as screws **329**. The output shaft **413** is shown as being contiguous with, and/or is one in the same as, the input shaft **412** of the second OCG portion **410**. The other parts of the second OCG portion **410**, and their operational dynamics, are as described hereinabove in reference to the OCG transmission **10**. It should be noted that the method of bolting the output shaft **313** to eighth gear **318** is only one of many such coupling methods that could be used to greater or lesser advantage in the series coupling of the present OCG series arrangement **300**. Splined connections could be used, or other types of bolted couplings, including flexible or universal joints could also be used, as called for by competent engineering judgment.

The second OCG portion **410** consists of the input shaft **412**, a fifth gear **414** (compare first gear **14**), a hollow driveshaft **416**, an eight gear **418** (compare fourth gear **14**), a hollow driveshaft **420** housing a clutch **422**, a sprag clutch **428**, and an output shaft **426**, each of which, with the exception of the input shaft having the flange **413** has corresponding parts as described hereinabove in reference to the OCG

transmission **10**. That is to say, the second OCG transmission portion **410** displayed in FIG. **4** is of the same physical and operational sort that is described hereinabove as the transmission invention **10**.

In operation, the overall series arrangement **300** provides an overall rotational speed reduction between the input shaft **312** and the output shaft **426** that is the multiplicative product of the speed reduction ratio of the first OCG portion **310** and the speed reduction ratio of the second OCG portion **410**. Thus the input/output speed reduction ratio exceeds that of a single OCG transmission **10**. Note also that said speed reduction property could, upon reverse driving, provide a speed multiplication, as should be obvious to those who are skilled in the art.

In the embodiment shown in FIG. **4**, ratios above 4.00 can be configured using multiple stages of the transmission **10** in series. As an example, the OCG ratio range potential for the OCG Drive **10** in a two-stage configuration can provide R=16.00 by employing two R=4.00 (as the single stage limit) in series (i.e., 16=4×4). Ratios between 4 and 16 can be created using a combination of twin ratios or dual ratios in series. A series arranged dual-ratio, two-stage configuration would employ configurations with two different OCG ratios to provide the desired overall output ratio. The overall ratio is defined as the product of the two in-series ratios, R_1, R_2 (i.e., $R_{out}=R_1 \times R_2$). The subject of two-stage configurations does not imply the use of two duplicate configurations, each with a clutch and sprag. More properly, it means that the OCG gearing would be employed in a two-stage configuration while maintaining the single clutch and sprag.

For a speed reduction of the sort the OCG was designed for, the upper and lower ratio limits are restricted by the geometrically possible input gear size. Above R=4.00, the input gear becomes impractically small because the bearing size and shaft become impossibly small. Below R=1.50, the input gear becomes too large creating gear tooth interference with the internal teeth of the second mesh.

OCGS in Series: Arrangement Two (Multi-Stage Variable/Variable Ratio)

Referring now to FIG. **5**, there is shown, in cross-sectional schematic view, two OCGs **310**A and **410**A, coupled in such a way that the output of a first OCG **310**A is directed into a second OCG **410**A so as to provide an alternate series arrangement **300**A, wherein the overall ratio of input/output speed reduction (or multiplication) can be also be greater than that of a single OCG. In contrast to the series arrangement described above, and shown in FIG. **4**, the coupling of the two OCGs, **310**A and **410**A, as shown in FIG. **5**, is configured to change the power flow through both OCGs **310**A and **410**A simultaneously, permitting a larger overall output speed ratio change though the OCG device than that of FIG. **4**. In FIG. **4**, the series arrangement only permits ratio change in the second OCG **410**. In FIG. **4**, OCG **310** is used as a fixed ratio device. In FIG. **5**, OCG **310**A and OCG **410**A are mechanically connected in a manner which permits both OCG to simultaneously shift between output ratio R=1:1 direct drive (clutch engaged), or the combined ratio of OCG **310**A and OCG **410**A (clutch disengaged). The selection of either the configuration described in FIG. **4**, or that described in FIG. **5**, is dependent upon design requirements of the intended end use application.

The series arrangement **300**A portrayed in FIG. **5** includes the first OCG **310**A which is comprised of the gear portion only of the transmission **10** described hereinabove. The first OCG **310**A has an input shaft **312**A and three moving parts with gears such that the input shaft drives a gear **314**, a hollow driveshaft **316**, and gear **318**, which correspond respectively to the gear **14**, the hollow driveshaft **16** and gear **18** in the above described OCG transmission **10**. The operational dynamics of the OCG gear train **310**A need not be described again, as it is the same as that given hereinabove in relation to the basic OCG transmission **10**.

Differences relative to OCG **300** shown in FIG. **4**, reflected in OCG **300**A shown in FIG. **5**, provide a different functionality, and consists of several changes. First, combining shaft **312** and shaft **412**(ref: FIG. **4**) into an integral shaft **312**A, which is now common to both OCG **310**A and **410**A. Secondly, flange **313** (ref: FIG. **4**) is eliminated and is replaced with drive hub **414**A (forward extension of gear **414**). Thirdly, gear **414** is mechanically decoupled at **414**B from shaft **312**A, and is now supported by bearings located between hub **414**A at gear **414** and shaft **312**A, permitting relative rotational motion between gear **414** and shaft **312**A, with no transfer of power at **414**B. The effect of the above three reconfiguration changes redirects power from OCG **310**A (gear **318**) directly to gear **414** via drive hub **414**A. Drive hub **414**A is depicted as integral to gear **414**. In certain instances, it may be advantageous for hub **414**A and gear **414** to be separate parts mechanically connected to provide power transmission capability in lieu of being a single integral part as shown in FIG. **5**. Whether hub **414**A and gear **414** are integral in configuration, or two separate parts mechanically connected, their function in FIG. **5** is to transfer power from ring gear **318** directly to input gear **414** of second stage OCG **410**A, which are mechanically connected via bolts **329**.

Relative to FIG. **5**, the second OCG portion **410**A consists of the alternate configuration input shaft **312**A (common to, and shared by both OCG **310**A and OCG **410**A), a gear **414** (compare gear **14**, except changes described above regarding decoupling of gear **414** from shaft **312**A at **414**B), a hollow driveshaft **416**, a gear **418** (compare gear **14**), a hollow driveshaft **420** housing a clutch **422**, a sprag clutch **428**, and an output shaft **426**, each of which, with the exception of reconfigured input gear **414** and shaft **312**A, has corresponding parts as described hereinabove in reference to the OCG transmission **10**. That is to say, the second OCG transmission portion **410**A displayed in FIG. **5** is of the same physical and operational sort that is described hereinabove as the transmission invention **10**, except with power entry directly to gear **414**/**414**A in lieu of input shaft **12**.

In operation, the overall alternate series arrangement **300**A provides an overall rotational speed reduction between the input shaft **312**A and the output shaft **426** that is the multiplicative product of the speed reduction ratio of the first OCG portion **310**A and the speed reduction ratio of the second OCG portion **410**A. Thus the input/output speed reduction ratio exceeds that of a single OCG transmission **10**. In addition, this alternate arrangement permits the simultaneous shifting of both OCG **310**A and OCG **410**A resulting in an overall ratio change between 1:1 (clutch engaged) and the multiplicative product of the speed reduction ratio of the first OCG portion **310**A and the speed reduction ratio of the second OCG portion **410**A (clutch disengaged). This functionality is in contrast with that of OCG **300** series depicted in FIG. **4** where only OCG **410** is clutch controlled and OCG **310** is a fixed-ratio device.

In the embodiment shown in FIG. **5**, ratios above 4.00 can be configured using multiple stages of the transmission **10** in series. As an example, the OCG ratio range potential for the OCG Drive **10** in a two-stage configuration can provide R=16.00 by employing two R=4.00 (as the single stage limit) in series (i.e., 16=4×4). Ratios between 4 and 16 can be created using a combination of twin ratios or dual ratios in series. A series arranged dual-ratio, two-stage configuration

would employ configurations with two different OCG ratios to provide the desired overall output ratio. The overall ratio is defined as the product of the two in-series ratios, R_1, R_2 (i.e., $R_{out}=R_1 \times R_2$). The subject of two-stage configurations does not imply the use of two duplicate configurations, each with a clutch and sprag. More properly, it means that the OCG gearing would be employed in a two-stage configuration while maintaining the single clutch and sprag. The embodiment shown in FIG. **5**, provides the output ratios 1:1 (direct drive), or R_{out}, where $R_{out}=R_1 \times R_2$, whereas in the embodiment shown in FIG. **4**, the output ratios are R_1, where R_1 is that of the first-stage OCG, or R_{out}, where $R_{out}=R_1 \times R_2$. It should be obvious, that for an equally geared pair of OCG in series that the **300**A configuration as shown in FIG. **5** provides a greater overall ratio change than OCG **300** in FIG. **4**.

Multiple Output OCG Application

Referring now to FIG. **6**, there is shown, in cross-sectional schematic view, a configuration consisting of an OCG **300**A (FIG. **5**), or, optional series drive OCG **300** (FIG. **4**), or, optional basic OCG **10** (FIGS. **1** and **2**), coupled to a drive motor **500** such that the configuration provides for a possibility of three output speed capability.

It should be obvious that the introduction of gear **314**A, which is mechanical coupled to gear **314**, redirects the power entry in the OCG from shaft **312**A to gear **314**.

The primary output is located at output shaft **426**, with optional outputs at shaft **504**, and/or at output shaft **312**A, each at a unique speed(s) with respect to drive motor **500**. For the depicted figure, the speeds for the output shafts are as follows. Output shaft **426** rotational speeds are direct drive ratio 1:1, or the speed determined by OCG overall ratio (R1×R2), dependent upon clutch mode. Output shaft **312**A speed is the product ratio of gear **502** and gear **314**A, at a fixed speed relative to the motor **500** speed. Output shaft **504** is direct drive and equal to the speed of motor **500**. Motor **500** may be a fixed or variable speed device as required in the end application. The orientation of motor **500** and/or rotational axis is not limited to the example configuration, but may be placed to the left of gear **502**/**314**A mesh if advantageous, or even perpendicular to the central axis of the OCG using appropriate gear geometry as the end application design requirements dictate.

The fixed-ratio speeds available at shaft **312**A and shaft **426** are a function of the drive ratio determined by gear **502** and gear **314**A and the former combined with the overall reduction ratio of OCG **300**A, **300**, or **10**. These gears (**502** and **314**A) may be speed-increasing as shown by gear **502** and gear **314**A, or speed-decreasing optional gear set comprised of gear **502**A and gear **314**B. The configuration depicted in FIG. **6** provides a wide range of flexibility in the number of possible output speeds, and their respective speed ratios relative to the speed of motor **500**. Outside the intended application for the OCG drive described in the background, an application for this configuration, utilizing a gear set such as example gear set **502**A/**314**B, may be a high-reliability long-life low speed/power gear drive system for extraterrestrial applications requiring a clutch-controlled two speed drive and one/multiple power take-offs which may be independently clutch controlled (coupled/uncoupled) and driven by a common motor.

If no intermediate output speeds are required for a given application, the user should use configurations Alternate Series OCG Drive **300**A (FIG. **5**), or optional series drive OCG **300** (FIG. **4**), or basic OCG **10** (FIGS. **1** and **2**) coupled to a driving device.

Although the invention has been shown and described with respect to a certain preferred embodiment or embodiments, certain equivalent alterations and modifications will occur to others skilled in the art upon the reading and understanding of this specification and the annexed drawings. In particular regard to the various functions performed by the above described components (assemblies, devices, etc.) the terms (including a reference to a "means") used to describe such components are intended to correspond, unless otherwise indicated, to any component which performs the specified function of the described component (i.e., that is functionally equivalent), even though not structurally equivalent to the disclosed structure which performs the function in the herein illustrated exemplary embodiments of the invention. In addition, while a particular feature of the invention may have been disclosed with respect to only one of several embodiments, such feature may be combined with one or more features of the other embodiments as may be desired and advantageous for any given or particular application.

What is claimed is:

1. A transmission having a gear arrangement for transmitting torque from an input shaft to an output shaft, the gear arrangement comprising: the input shaft rotating about a first rotational axis and having a first gear coupled thereto; a cylindrical shaft rotating about a second rotational axis that is offset from the first rotational axis, the cylindrical shaft having a second gear at one end thereof which engages the first gear and a third gear at an opposite end thereof; a fourth gear mounted to one end of a drive shaft, the fourth gear and the drive shaft rotating about the first rotational axis, the fourth gear being meshed with the third gear and the drive shaft having an end portion at an opposite end thereof; the output shaft rotating about the first rotational axis and having a flange portion attached thereto; a sprag clutch having an input side mounted to the end portion of the drive shaft and an output side mounted to the flange portion of the output shaft; a clutch attached to an end portion of the input shaft and to the output shaft; a device that couples and uncouples the input shaft with the output shaft whereby the transmission operates in first or second modes; and the first gear has external teeth adapted to engage internal teeth of the second gear and the third gear has external teeth adapted to engage internal teeth of fourth gear.

2. The gear arrangement as recited in claim **1**, wherein the first mode of operation results in a rotating speed ratio R_1 of 1 to 1 between the input shaft and the output shaft and the second mode of operation results in the rotating speed reduction ratio range of $4.00>R_2>1.50$ between the input shaft and the output shaft.

3. The gear arrangement as recited in claim **2**, wherein the second mode of operation results in the rotating speed reduction ratio range of 2 to 1 between the input shaft and the output shaft.

4. The gear arrangement as recited in claim **2**, wherein the device for coupling the input shaft with the output shaft causes the rotational speed of the output shaft to be the same as the rotational speed of the input shaft (i.e. ratio 1:1) is the clutch.

5. The gear arrangement as recited in claim **4**, wherein the clutch is a multi-plate clutch having first spaced clutch plates driven by an end portion of the input shaft and second spaced clutch plates driving the output shaft and interspersed between the first spaced clutch plates.

6. The gear arrangement as recited in claim **5**, wherein the device for coupling the input shaft with the output shaft to cause the rotational speed of the output shaft to be the same as the rotational speed of the input shaft whereby the transmission operates in first mode is the multi-plate clutch.

7. The gear arrangement as recited in claim **6**, wherein the relationship between the output rotational speed and the input rotational speed for the second mode of operation is given by the equation

$$\text{Output speed} = \text{Input speed} \times \left(\frac{N_{14}}{N_{30}}\right) \times \left(\frac{N_{34}}{N_{18}}\right)$$

where N_{14} is equal to the number of teeth on first gear, N_{30} is equal to the number of teeth on the second gear, N_{34} is equal to the number of teeth on the third gear, and N_{18} is equal to the number of teeth on the fourth gear.

8. The gear arrangement as recited in claim **5**, wherein the device for coupling the input shaft with the output shaft to cause the rotational speed of the output shaft to be less than the rotational speed of the input shaft whereby the transmission operates in second mode is the sprag clutch.

9. The gear arrangement as recited in claim **4**, further including a clutch actuator to engage or disengage the first and second interspersed clutch plates whereby if the multiplate clutch is engaged the rotational speed of the output shaft is at a first speed which is the same as that of the input shaft and if the clutch is disengaged the rotational speed of the output shaft is at a speed that is less than that of the input shaft.

10. The gear arrangement as recited in claim **1**, wherein the input shaft is driven by a device from which it receives rotational power.

11. The gear arrangement as recited in claim **10**, wherein the overall output ratio of two serially connected gear arrangements is the product of the two in-series ratios, R_1, R_2.

12. The gear arrangement as recited in claim **1**, wherein the first input shaft of the transmission is serially connected to the output shaft of a second gear arrangement for transmitting torque from a second input shaft to the first input shaft, the second gear arrangement comprises:

the second input shaft rotating about the first rotational axis and having a fifth gear coupled thereto;

a shaft rotating about the second rotational axis that is offset from the first rotational axis, the shaft having a sixth gear at one end thereof which engages the fifth gear and a seventh gear at an opposite end thereof; and

an eighth gear mounted to the input shaft of the transmission.

13. The gear arrangement as recited in claim **1**, wherein the transmission is a rotorcraft transmission of a light weight configuration with reduced parts.

* * * * *